SCOPE OF WORK

PROVIDE ONE NEW 7.5 TON SPLIT SYSTEM. REUSE EXISTING DUCTWORK AS MUCH AS POSSIBLE AND ~~PROVIDE NEW DUCTWORK AND NECESSARY~~ ACCESSORIES FOR COMPLETE HVAC SYSTEM.

PROVIDE 1 NEW RESTROOM EXHAUST FANS & 2 NEW OTHER EXHAUST FANS AS SHOWN IN PLAN.

COORDINATE WITH GC ANY ADDITIONAL REFRIGERATION WORK REQUIRED AND PLUMBING CONTRACTOR PROVIDING CONDENSATE LINES FOR MECHANICAL EQUIPMENT.

MECHANICAL PLAN NOTES

A. PROVIDE ONE NEW 7.5 TON SPLIT SYSTEM. REUSE EXISTING DUCTWORK AS MUCH AS POSSIBLE ~~AND PROVIDE NEW DUCTWORK AND~~ NECESSARY ACCESSORIES FOR COMPLETE HVAC SYSTEM. PROVIDE FLEXIBLE CONNECTORS ON SUPPLY AIR DUCT CONNECTIONS. PROVIDE DUCTWORK AND AIR DISTRIBUTION DEVICES AS INDICATED ON THE PLAN.

B. FOR SYSTEM OVER 2,000 CFM CHECK FOR DUCT MOUNTED AIR SMOKE DETECTORS AND THAT MEET THE REQUIREMENTS OF 2023 FMC 8th EDITION SEC. 606.2.1, INTERLOCKED TO SHUTDOWN AIR HANDLING UNIT UPON DETECTION OF SMOKE. IF NECESSARY PROVIDE SMOKE DETECTOR WITH AN ANNUNCIATOR, ALARM AND POWER L.E.D.'S FOR VISIBLE AND AUDIBLE ALARM SIGNAL, AND VISIBLE TROUBLE SIGNAL. MOUNT ANNUNCIATOR ON ROOM SIDE OF CEILING. SMOKE DETECTOR SHALL MEET UL268A.

C. ALL DUCTS SHALL BE MINIMUM 26 GAUGE SHEET METAL WITH EXTERNAL DUCT WRAP INSULATION FOR CONCEALED DUCTS AND ALL EXPOSED DUCTS WITH INTERNAL INSULATION. ALL DUCTS TO BE MANUFACTURED AND INSTALLED ACCORDING TO ASHRAE AND SMACNA METAL DUCT CONSTRUCTION STANDARD, LATEST EDITION. ALL MATERIALS WILL CONFORM TO NFPA 90A.

D. THERMOSTATS SHALL BE 7-DAY PROGRAMMABLE TYPE. MOUNT THERMOSTAT 48" A.F.F. COORDINATE LOCATION OF THERMOSTAT.

E. ALL INDOOR DUCT AND PLENUM INSULATION SCHEDULE;
1. CONCEALED, RECTANGULAR, ROUND AND FLAT-OVAL, SUPPLY-RETURN, OUTDOOR-AND EXHAUST-AIR DUCT AND AIR PLENUM INSULATION:
2. FLEXIBLE ELASTOMERIC, MINERAL-FIBER BLANKET, MINERAL-FIBER BOARD OR POLYOLEFIN WITH MINIMUM INSTALLED THERMAL RESISTANCE AS FOLLOWS:

	SA PLENUM	RA PLENUM
UNCONDITIONED SPACES:	R-4.2	R-4.2
UNVENTED ATTIC ABOVE INSULATED CEILING:	R-6	R-4.2
EXTERIOR OF BUILDING:	R-6	R-4.2

F. ALL SEAMS, JOINTS, ETC WILL BE SEALED TO MAKE AIR DUCT AIRTIGHT. PRESSURE SENSITIVE MATERIALS AND OTHERS APPROVED BY LATEST SMACNA. SEALING MATERIALS WILL BE USED.

G. ALL EVAPORATOR UNITS SHALL HAVE A FLOAT SWITCH TO CONTROL OVERFLOW THAT WILL AUTOMATICALLY SHUT DOWN THE A/C SYSTEM. THE DEVICE SHALL BE ATTACHED TO THE SECONDARY DRAIN OUTLET ON THE UNIT.

H. ALL AIR HANDLING UNIT CONDENSATE DRAINS WILL BE PVC FULL DIAMETER OF OUTLET AND WILL TERMINATE IN THE NEAREST APPROVED PLACE OF DISPOSAL.

I. ALL EQUIPMENT AND MATERIALS WILL BE INSTALLED ACCORDING TO THE MANUFACTURER'S INSTRUCTIONS AND ACCORDING TO THE BEST PRACTICE.

J. HANGER ATTACHMENTS TO THE STEEL STRUCTURE WILL BE RATED POWDER ACTUATED FASTENERS, "C" CLAMPS, WELDED STUDS, CLAMP HANGERS, JOIST CLAMPS OR OTHER METHODS RECOMMENDED BY SMACNA'S "METAL AND FLEXIBLE STANDARDS", CHAPTER 4, AND WILL HAVE A MINIMUM SAFETY MARGIN OF 4:1. SUSPENDED FROM TOP CHORD OF JOISTS, NOTHING FROM DECK OR CROSS BRACING.

K. ALL HVAC CONTROLS AND CONTROL WIRING SHALL BE PROVIDED BY THE MECHANICAL CONTRACTOR.

L. PROVIDE FIRE/SMOKE +SMOKE COMBINATION DAMPERS WHEREVER REQUIRED.COORDINATE WITH ARCHITECTURAL DRAWINGS FOR SMOKE/FIRE RATING OF THE WALLS/SLABS/ROOF.COORDINATE ELECTRICAL POWER REQUIREMENT FOR DAMPER ACTUATORS WITH ELECTRICAL CONTRACTOR.

N. MAINTAIN MIN. 10 FT. DISTANCE BETWEEN ALL EXHAUST AIR SOURCES AND OUTSIDE AIR INTAKE SOURCES ON THE ROOF.

FLORIDA BUILDING DEPARTMENT NOTES

ALL WORK SHALL COMPLY WITH APPLICABLE SECTIONS OF 2023 FBC 8th EDITION AND ALL AMENDMENTS AND RULES AND REGULATIONS OF THE DEPARTMENT OF BUILDINGS TO DATE.

1. THE LICENSED PROFESSIONAL ENGINEER, ARCHITECT OR OTHER PERSON HAVING NOT LESS THAN FIVE (5) YEARS EXPERIENCE SUPERVISING THE INSTALLATION OF SUCH MECHANICAL SYSTEMS AND CONDUCTING SUCH TESTS WILL FILE DOCUMENTATION AND REPORTS OF TESTS THAT THE SYSTEM COMPLIES WITH THE CONSTRUCTION DOCUMENTS AND APPLICABLE LAWS.
2. TESTS OF MECHANICAL SYSTEMS SHALL BE PERFORMED IN ACCORDANCE WITH THE FOLLOWING SECTIONS OF THE 2023 FMC 8th EDITION:
   A. VENTILATION SYSTEM SERVING COMMERCIAL COOKING APPLIANCES - MC 506
3. THE FOLLOWING WORK ITEMS, COMPONENTS, MATERIALS, CAPACITIES, ETC. SHALL COMPLY WITH THE REFERENCED CODE OR STANDARD:
   A. STANDARDS OF HEATING- 2023 FMC 8th EDITION - 309.1
   B. DUCT CONSTRUCTION AND INSTALLATION- 2023 FMC 8th EDITION - 603
   C. AIR INTAKES, EXHAUSTS AND RELIEF - 2023 FMC 8th EDITION - 401.5
   D. AIR FILTERS - 2023 FMC 8th EDITION - 605
   E. MANUAL AND AUTOMATIC FIRE AND SMOKE CONTROLS FOR AIR DISTRIBUTION SYSTEMS - 2023 FMC 8th EDITION - 606
4. MINIMUM TEMPERATURE TO BE MAINTAINED IN OCCUPIED SPACES DURING HEATING SEASON: 68 DEG. FAHRENHEIT.
5. VENTILATION FOR ALL AREA SHALL COMPLY WITH 2023 FMC 8th EDITION 401.
6. A STATEMENT SHALL BE FILED BY THE OWNER OR TENANT IN POSSESSION THAT THE VENTILATION SYSTEM WILL BE KEPT IN CONTINUOUS OPERATION AT ALL TIMES DURING THE NORMAL OCCUPANCY OF THE STRUCTURE AS REQUIRED BY 2023 FMC 8th EDITION 403.3
7. REFER TO ARCHITECTURAL DRAWINGS FOR REQUIRED FIRE-RATED WALL AND SMOKE WALL CONSTRUCTION AND LOCATION.
8. THESE PLANS ARE APPROVED ONLY FOR THE WORK INDICATED ON THE APPLICATION SPECIFICATION SHEET. ALL OTHER MATTERS SHOWN ARE NOT TO BE RELIED UPON OR TO BE CONSIDERED AS BEING APPROVED OR IN ACCORDANCE WITH APPLICABLE CODES.
9. ALL HEATING AND COOLING LOADS CALCULATED PER ASHRAE/ACCA 183.
10. SMOKE DETECTOR SHALL MEET UL268A.
11. VENTILATION SYSTEMS SHALL BE BALANCED TO MAINTAIN THE MINIMUM VENTILATION AIRFLOW RATE AS SHOWN IN VENTILATION REQUIREMENT TABLE. THIS SYSTEM SHALL BE BALANCED BY APPROVED METHOD. CONTRACTOR TO SUBMIT THE AIR BALANCE REPORT TO INSPECTOR OF RESPECTIVE BUILDING DEPARTMENT PRIOR TO FINAL INSPECTION.

GENERAL NOTES

A. CONTRACTORS AND SUB-CONTRACTORS SHALL CAREFULLY REVIEW THE CONSTRUCTION DOCUMENTS. INFORMATION REGARDING THE COMPLETE WORK IS DISPERSED THROUGHOUT THE DOCUMENT SET AND CANNOT BE ACCURATELY DETERMINED WITHOUT REFERENCE TO THE COMPLETE DOCUMENT SET. PAY SPECIAL ATTENTION TO THE RESPONSIBILITY SCHEDULE. WORK DESIGNATED ON SCHEDULE SHALL BE CONSIDERED INCLUDED IN YOUR SCOPE OF WORK AND CONTRACT AMOUNT.

B. DRAWINGS/DETAILS ARE TO BE CONSIDERED DIAGRAMMATIC, NOT NECESSARILY SHOWING IN DETAIL OR TO SCALE ALL MINOR ITEMS. UNLESS SPECIFIC DIMENSIONS ARE SHOWN, THE STRUCTURAL, ARCHITECTURAL AND SITE CONDITIONS SHALL GOVERN EXACT LOCATIONS. CONTRACTOR SHALL FOLLOW DRAWINGS IN LAYING OUT WORK, AND CHECK/COORDINATE DRAWINGS OF ALL TRADES.

C. COORDINATE WITH THE WORK OF OTHERS SECTIONS, EQUIPMENT FURNISHED BY OTHERS, REQUIREMENTS OF THE OWNER, AND WITH THE CONSTRAINTS OF THE EXISTING CONDITIONS OF THE PROJECT SITE. PROVIDE DUCT RISES AND DRIPS AS REQUIRED FOR FIELD INSTALLATION AND TRADE COORDINATION. NOTIFY ARCHITECT OF ANY DISCREPANCIES BEFORE STARTING WORK.

D. DRAWINGS FOR HVAC WORK ARE DIAGRAMMATIC, SHOWING THE GENERAL LOCATION, TYPE, LAYOUT, AND EQUIPMENT REQUIRED. THE DRAWINGS SHALL NOT BE SCALED FOR EXACT MEASUREMENT. REFER TO MANUFACTURER'S STANDARD INSTALLATION DRAWINGS FOR EQUIPMENT CONNECTIONS AND INSTALLATION REQUIREMENTS. PROVIDE DUCTWORK, CONNECTIONS, ACCESSORIES, OFFSETS, AND MATERIALS NECESSARY FOR A COMPLETE SYSTEM.

E. ALL WORK SHALL COMPLY WITH STATE AND LOCAL CODE REQUIREMENTS AS APPROVED AND AMENDED BY THE GOVERNING CITY. PURCHASE ALL PERMITS ASSOCIATED WITH THE WORK. OBTAIN ALL INSPECTIONS REQUIRED BY CODE.

F. USE OF COMBUSTIBLE MATERIALS IS NOT ALLOWED IN THE RETURN AIR PLENUM. MATERIALS USED IN THE PLENUM SHALL HAVE FLAME SPREAD RATING NOT TO EXCEED 25, AND SMOKE DEVELOPED RATING NOT TO EXCEED 50 WHEN TESTED IN ACCORDANCE WITH ASTM E 84. ALL EXPOSED WIRING IN THE PLENUM SHALL BE PLENUM RATED.

G. VERIFY LOCATION OF PERMISSIBLE NEW STRUCTURAL ROOF PENETRATIONS AND ADAPT THE REQUIRED DUCTS ACCORDINGLY. THE OPENINGS MUST BE LOCATED USING A REBAR LOCATOR, TRYING TO LEAVE A TRANSVERSE BAR WITHIN 4" FROM THE OPENING. LOCATE OPENINGS AT MID-DISTANCE BETWEEN THE STEMS OF THE DOUBLE TEE AND LONGITUDINAL REINFORCEMENT SHALL NEVER BE CUT. CALL THE ARCHITECT'S OFFICE IN CASE OF UNEXPECTED DIFFICULTIES.

H. ALL A/C AND FRESH AIR ROUND EXPOSED DUCTS WILL BE SPIRAL GALVANIZED AND READY FOR PAINTING. ALL RECTANGULAR DUCTS OVER CEILINGS MAY BE SHEET METAL WITH EXTERNAL INSULATION.

I. G.C. SHALL CONTRACT LANDLORD-APPROVED ROOFING CONTRACTOR TO FLASH AND SEAL ALL ROOF PENETRATIONS TO MAINTAIN ROOFING WARRANTY.

J. IF APPLICABLE CONTRACTOR TO PROVIDE SHOP DRAWINGS FOR KITCHEN VENTILATION SYSTEM INCLUDING TYPE 1 HOOD AND FOR THE WALK-IN COOLER & FREEZER.

K. REQUIRED INSURANCE SHALL BE PROVIDED BY THE PLUMBING CONTRACTOR FOR PROTECTION AGAINST PUBLIC LIABILITY AND PROPERTY DAMAGE FOR THE DURATION OF THE WORK.

L. CONSTRUCTION "AS BUILT" DRAWINGS AND DOCUMENTS SHALL BE PROVIDED TO THE OWNER WITHIN 30 DAYS AFTER THE DATE OF ACCEPTANCE AND PROVIDE COPY TO LL.

M. OPERATION MANUALS AND MAINTENANCE MANUALS SHALL BE PROVIDED TO THE BUILDING OWNER.

MECHANICAL SYMBOLS

	EXHAUST FAN		EXHAUST FAN WITH LIGHT
	SUPPLY OR OUTSIDE AIR DUCT		OPPOSED BLADE DAMPER
	RETURN OR EXHAUST AIR DUCT	S	DUCT SMOKE DETECTOR
	INSULATED RIGID DUCTWORK	T	PROGRAMMABLE THERMOSTAT
	FLEXIBLE DUCTWORK R-6.0	RS	REMOTE SENSOR
		T_S	TEMPERATURE SENSOR
	MANUAL VOLUME DAMPER	Ø	ROUND DUCT DIAMETER
		CFM	CUBIC FEET/ MINUTE
	AIR HANDLING UNIT	S/A	SUPPLY AIR
		R/A	RETURN AIR
	AIR COOLED CONDENSING UNIT	SG	SUPPLY GRILLE
		CD	CONDENSATE PIPING
M	MOTORIZED DAMPER	BD	BACK DRAFT DAMPER
		GC	GENERAL CONTRACTOR
	SUPPLY DIFFUSER REFER TO DIFFUSER SCHEDULE FOR SPECIFICATIONS		RETURN DIFFUSER REFER TO DIFFUSER SCHEDULE FOR SPECIFICATIONS

NOTE: THIS PROJECT MAY NOT USE EVERY SYMBOL OR DEVICE APPEARING ON THIS LEGEND.

OCCUPANCY CALCULATION PER 2023 FLORIDA MECHANICAL CODE,TABLE 403.3.1.1

DINNING AREA	300 SQ. FT.	@70 PEOPLE/1000SQ.FT.	21 PEOPLE
FRONT SERVICE AREA	200 SQ. FT.	@20 PEOPLE/1000SQ.FT.	4 PEOPLE
BACK OF HOUSE	220 SQ. FT.	@20 PEOPLE/1000SQ.FT.	4 PEOPLE
		TOTAL	29 PEOPLE

VENTILATION REQUIREMENTS PER 2023 FLORIDA MECHANICAL CODE,TABLE 403.3.1.1

DINNING AREA	300 SQ. FT. X 0.18 CFM/SQ. FT. =	54 CFM
	21 PEOPLE. X 7.5 CFM/PEOPLE. =	158 CFM
FRONT SERVICE AREA	200 SQ. FT. X 0.12 CFM/SQ. FT. =	24 CFM
	4 PEOPLE. X 7.5 CFM/PEOPLE. =	30 CFM
BACK OF HOUSE	220 SQ. FT. X 0.12 CFM/SQ. FT. =	26 CFM
	4 PEOPLE. X 7.5 CFM/PEOPLE. =	30 CFM
HALLWAY	35 SQ. FT. X 0.06 CFM/SQ. FT. =	3 CFM
OUTSIDE AIR REQUIRED		325 CFM
EXHAUST AIR CALCULATION		
~~FRONT SERVICE~~	~~200 SQ. FT. X 0.3 CFM/SQ. FT. =~~	~~140 CFM~~
BACK OF KITCHEN	220 SQ. FT. X 0.7 CFM/SQ. FT. =	154 CFM
UNISEX RR	#1 NO OF FIXTURE X 70 CFM/ FIXTURE =	70 CFM
EXHAUST AIR REQUIRED		364 CFM
AIR BALANCE		
O/A PROVIDED THROUGH AHU-1(N)		+400 CFM
BEF-1(N) (@70 CFM)		-70 CFM
KEF-1(N) (@140 CFM)		-140 CFM
KEF-2(N) (@160 CFM)		-160 CFM
BUILDING PRESSURE		+30 CFM

DIFFUSER SCHEDULE

MANUFACTURER	TITUS	S.A.E.
DESIGNATION	R	E
USE	SUPPLY	S.A.E.
MODEL	TDC-AA	S.A.E.
MOUNTING	CEILING	S.A.E.
LOCATION	AS SHOWN	AS SHOWN
FACE SIZE	12" X 12"	S.A.E.
NECK SIZE	-	S.A.E.
FRAME TYPE	LAY IN/ FLANGED	S.A.E.
ACCESSORIES	VOLUME DAMPER	S.A.E.

NOTES :
1. MAX. NC LEVEL 30 OR LESS.
2. PROVIDE SQUARE TO ROUND NECK ADAPTOR.
3. COORDINATE WITH ARCHITECT FOR PAINT AND FINISH.
4. PROVIDE 4-WAY AIR THROW PATTERN UNLESS NOTED OR INDICATED.
5. PROVIDE INSULATED BACKS ON ALL DIFFUSERS.
6. CONTRACTOR TO FIELD VERIFY AND CONFIRM THE CONDITION OF EXISTING DIFFUSER.
7. PROVIDE VOLUME CONTROL DAMPER IF NOT FOUND OR FOUND DAMAGED.
8. S.A.E. : SAME AS EXISTING. V.I.F. : VERIFY IN FIELD.

NECK SIZE TABLE - A

NECK SIZE DIA	CFM RANGE
Ø6"	0-100
Ø8"	101-200
Ø10"	201-400
Ø12"	401-600

SPLIT SYSTEM SCHEDULE

AIR HANDLER DATA	UNIT TAG	AHU-1(N)
	UNIT TYPE	VANE AXIAL PACKAGED AHU
	AREA SERVED	REFER PLAN
	SUPPLY AIR (CFM)	3000
	OUTSIDE AIR (CFM)	400
	E.S.P (INCH OF W.C.)	1.0
	MANUFACTURER	CARRIER
	MODEL NO.	40RFAA08A2A5-UA0A0
	WEIGHT, LBS	404
	ELECTRIC HEATER KW	10
	VOLTS/PH/HZ	208-230/3/60
	MCA (A)	34
	MOCP (A)	35
CONDENSING UNIT DATA	UNIT TAG	ACCU-1(N)
	AIR HANDLER SERVED	AHU-1(N)
	CAPACITY	7.5 TR
	REFRIGERANT	R410A
	TOT. COOLING CAP. (MBH)	95.7
	COOLING SENS. CAP. (MBH)	68.9
	COMPRESSOR RLA	26.8
	OUTDOOR FAN FLA	1.5
	VOLTS/PH/HZ	208-230/3/60
	M.C.A. / MOCP	33/50
	MANUFACTURER	CARRIER
	MODEL	38AUZD08A0B5-0A0A0
	EER	11.2
	IEER	15.5
	WEIGHT, LBS	391

SPLIT SYSTEM NOTES:-

1. PROVIDE DISCONNECT SWITCH & NON-POWERED GFI OUTLET.
2. COORDINATE FINAL LOCATION OF INDOOR AND OUTDOOR UNIT WITH ARCHITECT/OWNER/LANDLORD.
3. SUPPLY AIR CFM BASED ON HIGH SPEED.
4. REFRIGERANT R410A SHALL BE PROVIDED.
5. PROVIDE ALL ASSOCIATED ACCESSORIES.
6. ALL REFRIGERANT PIPING TO BE SIZED PER MANUFACTURERS RECOMMENDATIONS.
7. CONTRACTOR SHALL PROVIDE A LONG LINE SET FOR REFRIGERANT PIPING IN THE EVENT THAT TOTAL REFRIGERANT LENGTH EXCEEDS THE MANUFACTURER'S STANDARD RECOMMENDED LENGTH. CONTRACTOR TO FIELD VERIFY THE EXACT TOTAL REFRIGERANT LENGTH AND COORDINATE WITH THE MANUFACTURER PRIOR ORDERING UNIT
8. PROVIDE DRAIN PAN WITH WATER LEAK DETECTOR.
9. VERIFY ALL DATA WITH MANUFACTURER PRIOR TO ORDERING EQUIPMENT.
10. PROVIDE CONDENSATE DRAIN PUMP IF REQUIRED. ROUTE CONDENSATE DRAIN FROM AHU-1(N) TO THE NEAREST APPROVED PLACE OF DISPOSAL. COORDINATE WITH PLUMBING CONTRACTOR.
11. CONDENSING UNIT TO BE SELECTED AT 105°F AMBIENT CONDITION.
12. PROVIDE ACCESS DOOR FOR THE INDOOR UNIT IN COORDINATION WITH ARCHITECT.

FAN SCHEDULE

TAG	BEF-1(N)	KEF-1(N)	KEF-2(N)
STATUS	NEW	NEW	NEW
QUANTITY	1	1	1
MANUFACTURER	GREENHECK	GREENHECK	GREENHECK
MODEL	SP-90	SP-A250	SP-A250
CFM	70 @ 0.5 (ESP IN W.C.)	140 @ 0.5 (ESP IN W.C.)	160 @ 0.6 (ESP IN W.C.)
AMPS	0.29	0.56	0.56
ACCESSORIES	BDD	BDD	BDD
WEIGHT (LBS)	12	24	24
VOLT / PH / HZ	115/1/60	115/1/60	115/1/60
NOTES	1,2,3.	1,2,3.	1,2,3.

NOTES :
1. PROVIDE DISCONNECT SWITCH.
2. PROVIDE BACK DRAFT DAMPER.
3. FAN SHALL INTERLOCK WITH AHU-1(N) OR PROVIDE 24-HOUR TIME CLOCK. COORDINATE FINAL REQUIREMENT AND INTERCONNECTION WITH OWNER.

Property of NY Engineers

NY ENGINEERS

THIS DOCUMENT IS THE PROPERTY OF NY ENGINEERS AND SHALL NOT BE REPRODUCED WITHOUT THE WRITTEN CONSENT OF NY ENGINEERS.

GO GREEK YOGURT

REVISIONS DATES:

SR. NO.	DETAIL	DATE
01	BD COMMENTS	07/31/2024
02	DERM CMTS.	08/22/2024
03	DERM CMTS. 2	09/11/2024
04	DERM CMTS. 3	09/20/2024
05	DERM CMTS. 4	10/09/2024
06	DERM CMTS. 5	10/30/2024
07	PROJECT CORD.	01/10/2025
08	PROJECT CORD.	02/06/2025

ISSUE DATE: 02.20.24
PROJECT #:
DRAWN BY: NYE
CHECKED BY: NYE

HVAC NOTES & SCHEDULES

M-1

AIR QUANTITY TABLE		
LOCATION	SUPPLY AIR	RETURN AIR
DINING AREA & FRONT SERVICE	2500	SEE PLAN
BACK OF KITCHEN	450	SEE PLAN
MEN'S RESTROOM	50	NR

NOTES:
1. CONTRACTOR IS TO BALANCE THE EXISTING DIFFUSERS TO MATCH THE AIR QUANTITIES PROVIDE IN THE TABLE ABOVE.
2. CONTRACTOR TO FIELD VERIFY AND CONFIRM IF EXISTING DIFFUSERS ARE PROVIDED WITH VOLUME DAMPER IF NOT PROVIDE NEW ONE.
3. IF EXISTING VOLUME DAMPER FOUND DAMAGED REPAIR OR REPLACE WITH SAME TYPE.
4. CONTRACTOR TO CLEAN ALL EXISTING DIFFUSER TO BRING LIKE NEW AND REUSE IT.

AS PER THE NOTES ON THE PLANS, THE MECHANICAL DEPARTMENT MUST APPROVE ANY CHANGES TO THE MECHANICAL SYSTEM NOT REFLECTED IN THE PLANS BEFORE THE FINAL INSPECTION

1

ECONOMIZER EXCEPTION:
THE PROJECT IS LOCATED IN MIAMI, FL WHICH FALLS UNDER CLIMATE ZONE "1A"" THE ECONOMIZERS IS EXEMPTED ACCORDING TO 2023 FBC ENERGY CONSERVATION CODE SECTION #C403.3, EXCEPTION 1

8

CONTRACTOR TO INSTALL THE CONDENSING UNIT AT THE LOCATION PROVIDED FOR THE TENANT SPACE. CONFIRM THE FINAL LOCATION OF THE NEW CONDENSING UNIT WITH LANDLORD /OWNER PRIOR COMMENCING CONSTRUCTION OR BASE BID.

8

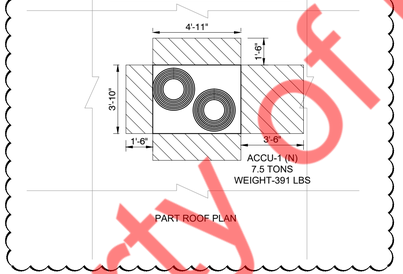

PART ROOF PLAN

8

CONTRACTOR TO FIELD VERIFY LOCATION FOR TOILET EXHAUST TERMINATION. ROUTE EXHAUST DUCT AS PER SITE CONDITION. COORDINATE WITH ARCHITECT/BASE BUILDING ENGINEER FOR EXHAUST TERMINATION LOCATION. CONTRACTOR TO REPORT THE DESIGN ENGINEER INCASE IF ANY DISCREPANCY FOUND PRIOR TO BASE BID/ CONSTRUCTION.

CONTRACTOR TO FIELD VERIFY LOCATION FOR KITCHEN EXHAUST TERMINATION. ROUTE EXHAUST DUCT AS PER SITE CONDITION. COORDINATE WITH ARCHITECT/BASE BUILDING ENGINEER FOR EXHAUST TERMINATION LOCATION. CONTRACTOR TO REPORT THE DESIGN ENGINEER INCASE IF ANY DISCREPANCY FOUND PRIOR TO BASE BID/ CONSTRUCTION.

CONTRACTOR TO CONNECT OUTSIDE AIR DUCT TO EXISTING OUTSIDE AIR TAP. CONTRACTOR TO FIELD VERIFY LOCATION OF OUTSIDE AIR TAP. CONTRACTOR TO REPORT THE DESIGN ENGINEER INCASE IF ANY DISCREPANCY FOUND PRIOR TO BASE BID/ CONSTRUCTION.

CONTRACTOR TO FIELD VERIFY THAT SMOKE DETECTOR IS INSTALLED ON EXISTING SUPPLY AIR DUCT IF NOT PROVIDE S/A DUCT MOUNTED SMOKE DEFECTOR

ALL EXISTING DUCTWORK WITH AIR DIFFUSERS, THERMOSTATS, SENSORS & ALL HVAC SERVICES TO REMAIN AND TO BE REUSED. CONTRACTOR TO REPAIR/REPLACE ANY INSULATION OR DUCTWORK DAMAGE WITH NEW ONE OF SAME TYPE. INSULATION R-VALUE SHALL BE MINIMUM PER THE LOCAL CODE. CONTRACTOR TO REPORT THE DESIGN ENGINEER INCASE IF ANY DISCREPANCY FOUND PRIOR TO BASE BID/ CONSTRUCTION.

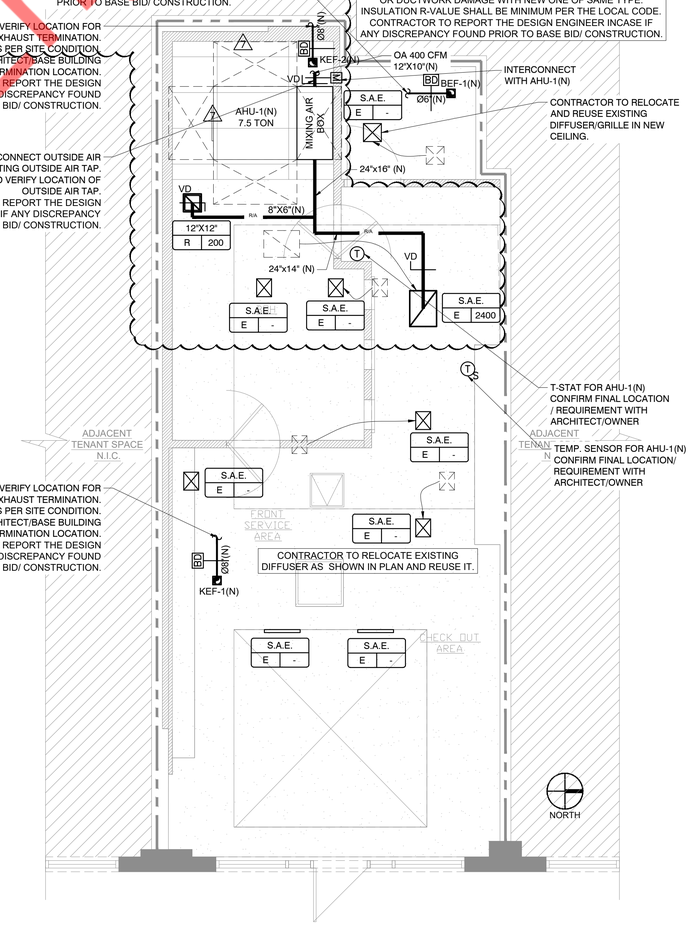

CONTRACTOR TO FIELD VERIFY LOCATION FOR KITCHEN EXHAUST TERMINATION. ROUTE EXHAUST DUCT AS PER SITE CONDITION. COORDINATE WITH ARCHITECT/BASE BUILDING ENGINEER FOR EXHAUST TERMINATION LOCATION. CONTRACTOR TO REPORT THE DESIGN ENGINEER INCASE IF ANY DISCREPANCY FOUND PRIOR TO BASE BID/ CONSTRUCTION.

HVAC FLOOR PLAN | SCALE 1/4" = 1'-0" | 1

Property of NY Engineers

NY ENGINEERS

THIS DOCUMENT IS THE PROPERTY OF NY ENGINEERS AND SHALL NOT BE REPRODUCED WITHOUT THE WRITTEN CONSENT OF NY ENGINEERS.

GO GREEK YOGURT

REVISIONS DATES:

SR. NO.	DETAIL	DATE
01	BD COMMENTS 1	07/31/2024
02	DERM CMTS.	08/22/2024
03	DERM CMTS. 2	09/11/2024
04	DERM CMTS. 3	09/20/2024
05	DERM CMTS. 4	10/09/2024
06	DERM CMTS. 5	10/30/2024
07	PROJECT CORD.	01/10/2025
08	PROJECT CORD. 8	02/06/2025

ISSUE DATE: 02.20.24
PROJECT #:
DRAWN BY: NYE
CHECKED BY: NYE

HVAC FLOOR PLAN

M-2

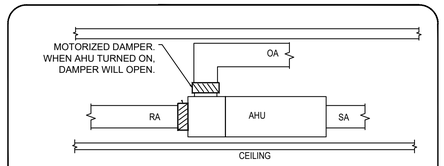

AHU DETAIL
NOT TO SCALE

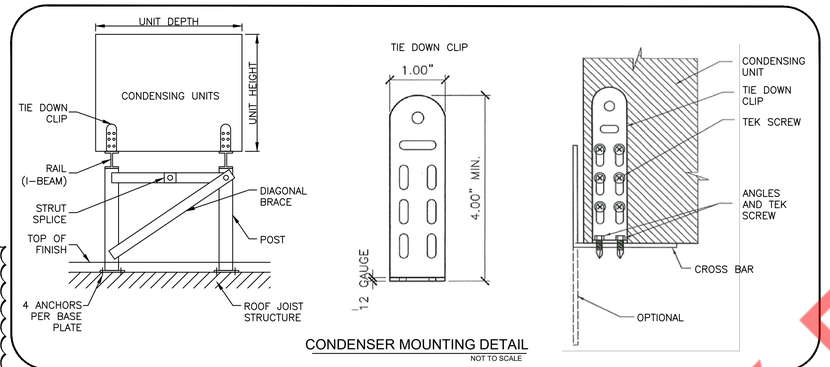

CONDENSER MOUNTING DETAIL
NOT TO SCALE

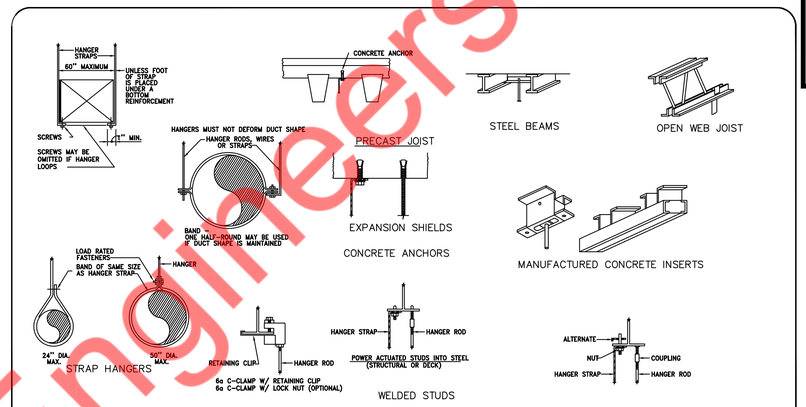

UPPER & LOWER ATTACHMENTS & DEVICES
NOT TO SCALE

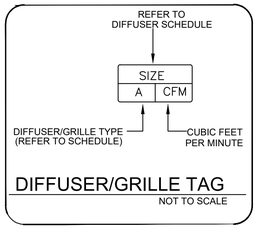

DIFFUSER/GRILLE TAG
NOT TO SCALE

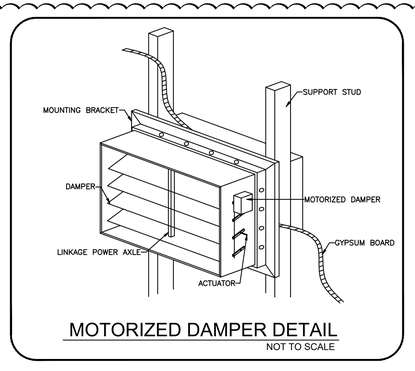

MOTORIZED DAMPER DETAIL
NOT TO SCALE

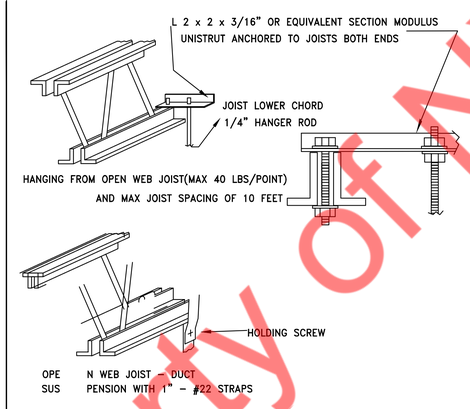

DUCT MOUNTING DETAIL
NOT TO SCALE

CHANNEL SELECTION		
DUCT WIDTH MIN.	CHANNEL GUAGE MIN.	CHANNEL PROFILE
LESS THAN 18"	22 3"x 2"	
LESS THAN 30"	18 3"x 2"	

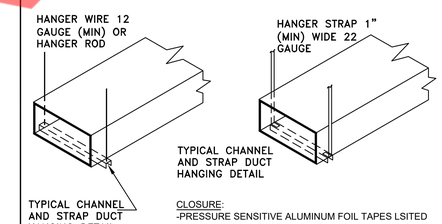

CLOSURE:
-PRESSURE SENSITIVE ALUMINUM FOIL TAPES LSITED UNDER UL 181A, PART I (P)
- HEAT ACTIVATED ALUMINUM FOIL/SCRIM TAPES LISTED UNDER UL 181A, PART II (H)
- MASTIC AND GLASS FABRIC TAPE CLOSURE SYSTEMS LISTED UNDER UL 181A, PART III (M)

DUCT SIZE,IN.	MAXIMUM HANGER SPACING
① WIDTH 48" OR GREATER	4'–0"
② LESS THEN 48"W X 12"H	6'–0"
③ WIDTH BETWEEN 24" & 48" & HEIGHT OVER 24"	6'–0"
④ WIDTH BETWEEN 24" & 48" & HEIGHT BETWEEN 12" & 24"	8'–0"
⑤ WIDTH LESS THAN 24" & HEIGHT GREATER THAN 12"	8'–0"
DUCT REINFORCING PER SMACNA REQUIRED	

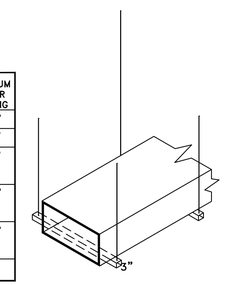

HANGER SPACING AND EXTENSION 3" WIDE CHANNELS

DUCT SUPPORTS
NOT TO SCALE

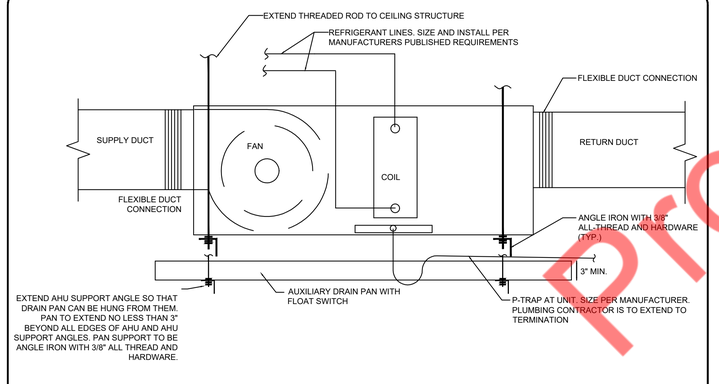

TYPICAL HORIZONTAL AIR HANDLER DETAIL
NOT TO SCALE

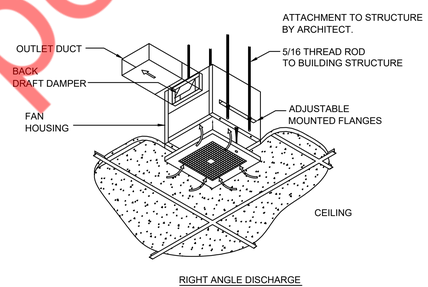

RIGHT ANGLE DISCHARGE

CEILING EXHAUST FAN DETAIL
NOT TO SCALE

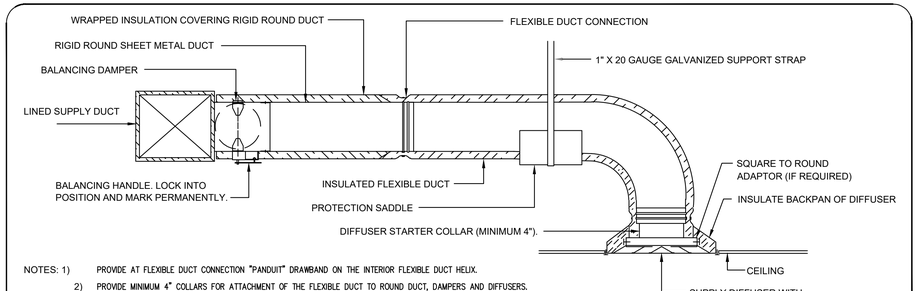

NOTES: 1) PROVIDE AT FLEXIBLE DUCT CONNECTION "PANDUIT" DRAWBAND ON THE INTERIOR FLEXIBLE DUCT HELIX.
2) PROVIDE MINIMUM 4" COLLARS FOR ATTACHMENT OF THE FLEXIBLE DUCT TO ROUND DUCT, DAMPERS AND DIFFUSERS.
3) BAND RIGID ROUND DUCT INSULATION TO DUCT AND PROVIDE TAPE FOR INSULATION OVERLAP.

DIFFUSER CONNECTION DETAIL-FLEX DUCT
NOT TO SCALE

Property of NY Engineers

NY ENGINEERS

THIS DOCUMENT IS THE PROPERTY OF NY ENGINEERS AND SHALL NOT BE REPRODUCED WITHOUT THE WRITTEN CONSENT OF NY ENGINEERS.

GO GREEK YOGURT

REVISIONS DATES:

SR. NO.	DETAIL	DATE
01	BD COMMENTS	07/31/2024
02	DERM CMTS.	08/22/2024
03	DERM CMTS. 2	09/11/2024
04	DERM CMTS. 3	09/20/2024
05	DERM CMTS. 4	10/09/2024
06	DERM CMTS. 5	10/30/2024
07	PROJECT CORD.	01/10/2025
08	PROJECT CORD.	02/06/2025

ISSUE DATE: 02.20.24
PROJECT #:
DRAWN BY: NYE
CHECKED BY: NYE

MECHANICAL DETAILS

M-3

System Checksums

By Trial

AHU-1 **Single Zone**

COOLING COIL PEAK

Peaked at Time: Mo/Hr: 8 / 19
Outside Air: OADB/WB/HR: 88 / 76 / 115

	Space Sens. + Lat. Btu/h	Plenum Sens. + Lat Btu/h	Net Total Btu/h	Percent Of Total (%)
Envelope Loads				
Skylite Solar	0	0	0	0
Skylite Cond	0	0	0	0
Roof Cond	0	0	0	0
Glass Solar	7,601	0	7,601	11
Glass/Door Cond	1,071	0	1,071	2
Wall Cond	1,026	1,858	2,885	4
Partition/Door	1,949		1,949	3
Floor	708		708	1
Adjacent Floor	0	0	0	0
Infiltration	3,975		3,975	6
Sub Total ==>	16,330	1,858	18,189	26
Internal Loads				
Lights	2,516	629	3,145	4
People	10,832	0	10,832	15
Misc	17,514	0	17,514	25
Sub Total ==>	30,862	629	31,492	45
Ceiling Load	227	-227	0	0
Ventilation Load	0	0	19,853	28
Adj Air Trans Heat	0		0	0
Dehumid. Ov Sizing			0	0
Ov/Undr Sizing	0		0	0
Exhaust Heat		-514	-514	-1
Sup. Fan Heat			1,215	2
Ret. Fan Heat		0	0	0
Duct Heat Pkup		0	0	0
Underflr Sup Ht Pkup			0	0
Supply Air Leakage		0	0	0
Grand Total ==>	47,420	1,747	70,235	100.00

CLG SPACE PEAK

Mo/Hr: Sum of
OADB: Peaks

	Space Sensible Btu/h	Percent Of Total (%)
Skylite Solar	0	0
Skylite Cond	0	0
Roof Cond	0	0
Glass Solar	8,281	21
Glass/Door Cond	1,006	3
Wall Cond	1,039	3
Partition/Door	1,949	5
Floor	698	2
Adjacent Floor	0	0
Infiltration	1,112	3
Sub Total ==>	14,086	36
Lights	2,516	6
People	4,447	11
Misc	17,514	45
Sub Total ==>	24,477	63
Ceiling Load	218	1
Ventilation Load	0	0
Adj Air Trans Heat	0	0
Ov/Undr Sizing	0	0
Grand Total ==>	38,782	100.00

HEATING COIL PEAK

Mo/Hr: Heating Design
OADB: 48

	Space Peak Space Sens Btu/h	Coil Peak Tot Sens Btu/h	Percent Of Total (%)
Envelope Loads			
Skylite Solar	0	0	0.00
Skylite Cond	0	0	0.00
Roof Cond	0	0	0.00
Glass Solar	0	0	0.00
Glass/Door Cond	-1,892	-1,892	8.95
Wall Cond	-350	-986	4.67
Partition/Door	-3,026	-3,026	14.32
Floor	-2,008	-2,008	9.50
Adjacent Floor	0	0	0
Infiltration	-2,423	-2,423	11.46
Sub Total ==>	-9,699	-10,335	48.91
Internal Loads			
Lights	0	0	0.00
People	0	0	0.00
Misc	0	0	0.00
Sub Total ==>	0	0	0.00
Ceiling Load	-58	0	0.00
Ventilation Load	0	-10,928	51.71
Adj Air Trans Heat	0	0	0
Ov/Undr Sizing	0	0	0.00
Exhaust Heat		131	-0.62
OA Preheat Diff.		0	0.00
RA Preheat Diff.		0	0.00
Additional Reheat		0	0.00
Underflr Sup Ht Pkup		0	0.00
Supply Air Leakage		0	0.00
Grand Total ==>	-9,757	-21,132	100.00

TEMPERATURES

	Cooling	Heating
SADB	55.5	76.3
Ra Plenum	76.0	71.8
Return	75.9	71.8
Ret/OA	78.3	67.0
Fn MtrTD	0.1	0.0
Fn BldTD	0.1	0.0
Fn Frict	0.4	0.0

AIRFLOWS

	Cooling	Heating
Diffuser	2,051	2,051
Terminal	2,051	2,051
Main Fan	2,051	2,051
Sec Fan	0	0
Nom Vent	400	400
AHU Vent	400	400
Infil	80	89
MinStop/Rh	0	0
Return	2,127	2,136
Exhaust	477	485
Rm Exh	3	4
Auxiliary	0	0
Leakage Dwn	0	0
Leakage Ups	0	0

ENGINEERING CKS

	Cooling	Heating
% OA	19.5	19.5
cfm/ft²	2.72	2.72
cfm/ton	304.70	
ft²/ton	112.02	
Btu/hr·ft²	107.12	-35.03
No. People	29	

COOLING COIL SELECTION

	Total Capacity ton	Total Capacity MBh	Sens Cap. MBh	Coil Airflow cfm	Enter DB °F	Enter WB °F	Enter HR gr/lb	Leave DB °F	Leave WB °F	Leave HR gr/lb
Main Clg	6.7	80.8	54.0	2,051	78.3	65.7	74.6	55.0	52.7	55.7
Aux Clg	0.0	0.0	0.0	0	0.0	0.0	0.0	0.0	0.0	0.0
Opt Vent	0.0	0.0	0.0	0	0.0	0.0	0.0	0.0	0.0	0.0
Total	6.7	80.8								

AREAS

	Gross Total	Glass ft²	Glass (%)
Floor	754		
Part	318		
Int Door	0		
ExFlr	754		
Roof	0	0	0
Wall	382	114	30
Ext Door	23	23	100

HEATING COIL SELECTION

	Capacity MBh	Coil Airflow cfm	Ent °F	Lvg °F
Main Htg	-26.4	2,051	67.0	76.3
Aux Htg	0.0	0	0.0	0.0
Preheat	0.0	0	0.0	0.0
Humidif	0.0	0	0.0	0.0
Opt Vent	0.0	0	0.0	0.0
Total	-26.4			

Project Name:
Dataset Name:

TRACE® 700 v6.3.3 calculated at 11:37 PM on 02/06/2025
Alternative - 1 System Checksums Report Page 1 of 1

Property of NY Engineers

NY ENGINEERS

THIS DOCUMENT IS THE PROPERTY OF NY ENGINEERS AND SHALL NOT BE REPRODUCED WITHOUT THE WRITTEN CONSENT OF NY ENGINEERS.

GO GREEK YOGURT

REVISIONS DATES:

SR. NO.	DETAIL	DATE
01	BD COMMENTS	07/31/2024
02	DERM CMTS.	08/22/2024
03	DERM CMTS. 2	09/11/2024
04	DERM CMTS. 3	09/20/2024
05	DERM CMTS. 4	10/09/2024
06	DERM CMTS. 5	10/30/2024
07	PROJECT CORD.	01/10/2025
08	PROJECT CORD.	02/06/2025

ISSUE DATE: 02.20.24
PROJECT #:
DRAWN BY: NYE
CHECKED BY: NYE

HEAT LOAD CALCULATION REPORT

M-4

SCOPE OF WORK

1. REUSE THE EXISTING (2)400A, 120/208V, 3-PHASE, 4-WIRE ELECTRICAL SERVICE FOR THE THE PROPOSED TENANT'S SPACE.
2. REUSE THE EXISTING(2) 400A(M.L.O), 120/208V, 3-PHASE, 4-WIRE ELECTRICAL PANEL "A" AND PANEL "B" .
3. ALL NECESSARY EQUIPMENT, WIRING AND LIGHTING FOR THE PROPOSED SPACE INCLUDING WIRING FOR VENTILATION EQUIPMENT, COORDINATE WITH GC FOR LOW VOLTAGE WIRING.

ELECTRICAL PLAN NOTES

1. ELECTRICAL CONTRACTOR SHALL REVIEW ALL DRAWINGS OF THIS SET.
2. CONTRACTOR TO VERIFY THAT ALL EQUIPMENT SHOWN AS EXISTING MATCHES THE DESCRIPTIONS AND SPECIFICATIONS SHOWN ON DRAWINGS AND SCHEDULES. IF DIFFERENT, NOTIFY ARCHITECT/ENGINEER BEFORE BIDDING, ORDERING, OR PROCEEDING WITH WORK.
3. ELECTRICAL CONTRACTOR SHALL SUPPLY AND INSTALL ALL NEW ELECTRICAL WORK INDICATED. CONSTRUCTION SHALL BE IN ACCORDANCE WITH DRAWINGS AND APPLICABLE SPECIFICATIONS. IF A PROBLEM IS ENCOUNTERED IN COMPLYING WITH THIS REQUIREMENT, CONTRACTOR SHALL NOTIFY THE OWNER OR HIS REPRESENTATIVE AS SOON AS POSSIBLE AFTER DISCOVERY OF THE PROBLEM AND SHALL NOT PROCEED WITH THAT PORTION OF THE WORK UNTIL OWNER HAS DIRECTED CORRECTIVE ACTION TO BE TAKEN.
4. ELECTRICAL CONTRACTOR SHALL VISIT JOB SITE AND FAMILIARIZE HIMSELF WITH ALL CONDITIONS AFFECTING ELECTRICAL AND COMMUNICATIONS INSTALLATION AND MAKE PROVISIONS AS TO THE COST THEREOF. EXISTING CONDITIONS OF ELECTRICAL EQUIPMENT, LIGHT FIXTURES, ETC.,. THAT ARE PART OF THE FINAL SYSTEM SHALL BE VERIFIED BY THE CONTRACTOR PRIOR TO SUBMITTING HIS BID.
5. ALL WORK SHALL BE PERFORMED IN ACCORDANCE WITH THE 2020 EDITION OF THE NATIONAL ELECTRIC CODE ALL CODES AND ORDINANCES OF THE AUTHORITY HAVING JURISDICTION.
6. DO NOT SCALE THE ELECTRICAL DRAWINGS. REFER TO ARCHITECTURAL PLANS AND ELEVATIONS FOR EXACT LOCATION FOR ALL EQUIPMENT. CONFIRM WITH OWNER'S REPRESENTATIVE.
7. ALL ELECTRICAL NOT BEING REUSED MUST BE REMOVED IN ITS ENTIRETY.
8. ALL CONDUIT IN OR UNDERGROUND OR IN CONCRETE MUST BE RIGID GALVANIZED STEEL.
9. CIRCUIT BREAKERS AND PANELS TO BE BOLT ON TYPE.
10. ALL EQUIPMENT SHALL BE APPROVED BY UL OR OTHER NATIONALLY RECOGNIZED TESTING COMPANY.
11. ALL RECEPTACLES SHALL BE GROUNDED AS REQUIRED BY NEC 250.146.
12. SUBMIT SERVICE ENTRANCE EQUIPMENT FOR SEPARATE APPROVAL.
13. ALL LOW VOLTAGE MUST BE IN CONDUIT TO ABOVE THE DROP CEILING. BRIDAL RINGS OR "J" HOOKS REQUIRED.
14. SEPARATE PERMITS ARE REQUIRED FOR ALL LOW VOLTAGE SUCH AS TELEPHONE, DATA, THERMOSTAT, MUSIC, ALARMS ETC.
15. SEPARATE PERMIT REQUIRED FOR SIGNAGE.
16. PRIOR TO ANY CONSTRUCTION WORK BEGINNING AN ON-SITE MEETING WITH GENERAL CONTRACTORS IS REQUIRED.
17. ELECTRICIAN MUST BE ON SITE FOR ALL INSPECTIONS.
18. MINIMUM WIRE SIZE SHALL BE #12 A.W.G. EXCLUDING CONTROL WIRING. ALL CONDUCTORS SHALL BE COPPER AND UNLESS OTHERWISE NOTED THHN INSULATION.
19. OUTLET BOXES SHALL BE PRESSED STEEL IN DRY LOCATIONS, PLASTIC AND CAST ALLOY WITH THREADED HUBS IN WET OR DAMP LOCATIONS, AND SPECIAL ENCLOSURES FOR OTHER CLASSIFIED AREAS.
20. IT IS NOT THE INTENT OF THESE PLANS TO SHOW EVERY MINOR DETAIL OF CONSTRUCTION. THE CONTRACTOR IS EXPECTED TO FURNISH AND INSTALL ALL ITEMS FOR A COMPLETE ELECTRICAL SYSTEM AND PROVIDE ALL REQUIREMENTS NECESSARY FOR EQUIPMENT TO BE PLACED IN PROPER WORKING ORDER.
21. ELECTRICAL SYSTEM SHALL BE COMPLETE AND EFFECTIVELY GROUNDED AS REQUIRED BY THE N.E.C. OR LOCAL CODES.
22. ALL MATERIALS SHALL BE NEW AND BEAR UNDERWRITERS' LABELS WHERE APPLICABLE.
23. ALL WORK SHALL BE PERFORMED BY A LICENSED ELECTRICAL CONTRACTOR IN A FIRST CLASS WORKMANLIKE MANNER. THE COMPLETED SYSTEM SHALL BE FULLY OPERATIVE AND ACCEPTED BY ENGINEER/ARCHITECT.
24. ALL WORK SHALL BE COORDINATED WITH OTHER TRADES TO AVOID INTERFERENCE WITH THE PROGRESS OF CONSTRUCTION.
25. ELECTRICAL CONTRACTOR SHALL GUARANTEE ALL MATERIALS AND WORKMANSHIP FREE FROM DEFECTS FOR A PERIOD OF NOT LESS THAN ONE YEAR FROM DATE THAT CERTIFICATE OF OCCUPANCY IS ISSUED. WARRANTY SHALL BE PROVIDED IN WRITING. PROVIDE COPY TO LL.
26. CORRECTION OF ANY DEFECTS SHALL BE COMPLETED WITHOUT ADDITIONAL CHARGE AND SHALL INCLUDE REPLACEMENT OR REPAIR OF ANY OTHER PHASE OF THE INSTALLATION WHICH MAY HAVE BEEN DAMAGED THEREBY.
27. ALL REQUIRED INSURANCE SHALL BE PROVIDED FOR PROTECTION AGAINST PUBLIC LIABILITY AND PROPERTY DAMAGE FOR THE DURATION OF THE WORK.
28. CONTRACTOR SHALL PAY FOR ALL PERMITS, FEES, INSPECTIONS AND TESTING. CONTRACTOR TO OBTAIN PERMIT AND APPROVED SUBMITTALS PRIOR TO BEGINNING WORK OR ORDERING EQUIPMENT.
29. THE ELECTRICAL INSTALLATION SHALL MEET ALL STANDARD REQUIREMENTS OF POWER AND TELEPHONE COMPANIES.
30. CONTRACTOR SHALL COORDINATE WITH MECHANICAL DRAWINGS AND PROVIDE ALL NECESSARY CONTROL WIRING.
31. ALL CIRCUIT BREAKERS FEEDING MECHANICAL EQUIPMENT SHALL BE HACR TYPE CIRCUIT BREAKERS.
32. PROVIDE AND INSTALL CONDUIT, CONDUCTORS, PULL WIRES, BOXES, COVER PLATES, DEVICES, ETC. FOR ALL OUTLETS AS INDICATED.
33. MATERIALS, PRODUCTS, AND EQUIPMENT, INCLUDING ALL COMPONENTS THEREOF, SHALL BE NEW AND SUCH AS APPEAR ON THE UL LIST OF APPROVED ITEMS AND SHALL MEET OR EXCEED THE REQUIREMENTS OF N.E.C. NEMA, AND IECE.
34. CONTRACTOR SHALL SUBMIT SHOP DRAWINGS OR CUT SHEETS OF LIGHTING FIXTURES, SWITCHES, AND OTHER ELECTRICAL ITEMS FOR APPROVAL BY ENGINEER/ARCHITECT.
35. ELECTRICAL CONTRACTOR SHALL BE RESPONSIBLE FOR ALL CUTTING, PATCHING AND FIRED CAULKING REQUIRED OF HIS WORK.
36. ELECTRICAL CONTRACTOR SHALL LABEL ALL PANELS W/TYPE WRITTEN DIRECTORIES.
37. ALL ELECTRICAL AND COMMUNICATIONS OUTLETS TO BE AT 24" A.F.F. UNLESS NOTED OTHERWISE, AND VERTICALLY MOUNTED.
38. ALL LIGHT SWITCHES TO BE AT 42" A.F.F.
39. ALL ELECTRICAL WIRING SHALL BE THE RESPONSIBILITY OF THE ELECTRICAL CONTRACTOR. ALL ELECTRICAL WIRING FOR HVAC SYSTEM INCLUDING CONTROLS, THERMOSTATS, POWER, ETC. SHALL BE THE RESPONSIBILITY OF THE ELECTRICAL CONTRACTOR.
40. BREAKER AND PANELS – ALL CURRENT CARRYING BUSSES SHALL BE COPPER. ALL GROUND BUS BARS SHALL BE COPPER. PANEL BOARD ENCLOSURES SHALL BE FURNISHED WITHOUT PRE-PUNCHED CONCENTRIC HOLES. A.I.C. RATINGS SHALL BE AS INDICATED ON PANEL BOARD SCHEDULES.
41. DISCONNECT SWITCHES SHALL BE H.P. RATED, GENERAL DUTY, QUICK-MAKE, QUICK-BREAK ENCLOSURES AS REQUIRED BY EXPOSURE.
42. MOTOR STARTERS SHALL BE MANUAL OR MAGNETIC, WITH OVERLOAD RELAYS IN EACH HOT LEG.
43. THE TERM "PROVIDE" USED IN THE CONSTRUCTION DOCUMENTS AND SPECIFICATIONS INDICATES THE CONTRACT SHALL FURNISH AND INSTALL.
44. CONTRACTOR SHALL CONFIRM WITH ANY AND ALL REQUIREMENTS SUCH AS: LUG SIZE RESTRICTIONS, CONDUIT ENTRY, TRANSFORMER SIZE, SCHEDULED DOWN TIME FOR OWNERS CONFIRMATION, ETC., ANY CONFLICTS SHALL BE BROUGHT TO ATTENTION OF THE ENGINEER BEFORE PROCEEDING WITH ANY WORK.
45. VOLTAGE DROP FOR ALL BRANCH CONDUCTORS SHALL NOT EXCEED 3%. WHERE VOLTAGE DROP EXCEEDS 3%, CONTRACTOR SHALL INCREASE SIZE OF CONDUCTORS.
46. CONTRACTOR SHALL PROVIDE GFI TYPE BREAKER FOR ALL EXTERIOR 120V CIRCUITS OR GFI PROTECTION – FOR THE WHOLE CIRCUIT.
47. GAS PIPING SHALL BE BONDED.
48. ALL OUTDOOR EQUIPMENT SHALL BE WEATHERPROOF.
49. CONSTRUCTION "AS BUILT" DRAWINGS AND DOCUMENTS SHALL BE PROVIDED TO THE OWNER WITHIN 30 DAYS AFTER THE DATE OF ACCEPTANCE. PROVIDE A COPY TO LL.
50. OPERATION MANUALS AND MAINTENANCE MANUALS SHALL BE PROVIDED TO THE BUILDING OWNER.
51. ABSOLUTELY NO FLEXIBLE CONDUIT IS PERMITTED IN DEMISING WALLS. FLEXIBLE CONDUIT IS PERMITTED FOR SHORT FINAL CONNECTIONS ONLY (6'-0" OR LESS).
52. EXPOSED CONDUIT SHALL BE INSTALLED IN STRAIGHT LINES, PARALLEL OR IN RIGHT ANGLES TO THE BUIDING STRUCTURE. DO NOT LOOP EXCESS FLEXIBLE CONDUIT IN CEILING SPACE OR WALL CAVITY. NO CONDUIT TO BE SUPPORTED FROM THE ROOF DECK.
53. CABLE TYPES AC AND NM CABLES ARE NOT ACCEPTABLE. TYPE MC CABLE, ELECTRIC METALLIC TUBING (EMT) AND RIGID GALVANIZED CONDUIT ARE PERMITTED.
54. ALL EQUIPMENT, DEVICES AND FIXTURES SHALL BE GROUNDED IN COMPLIANCE WITH NEC AND UL REQUIREMENTS.
55. ALL PANELS TO BE UL LABELED WITH BOLT-ON TYPE CIRCUIT BREAKERS.
56. 7-DAY 24-HOUR TIME CLOCK IS REQUIRED TO CONTROL STOREFRONT ENTRY LIGHTS, SHOW WINDOW LIGHTS, SHOW WINDOW RECEPTACLES AND STOREFRONT SIGNAGE, ILLUMINATED STOREFRONT SIGNS MUST REMAIN LIT DURING ALL MALL BUSINESS HOURS.
57. TENANT IS REQUIRED TO MAKE A FIELD SURVEY OF THE EXISTING ELECTRICAL SERVICE TO ENSURE THAT THE TOTAL CONNECTED LOAD DOES NOT EXCEED THE ELECTRIC SERVICE. ANY/ALL MODIFICATIONS OR UPGRADES NEEDED ARE SUBJECT TO LANDLORD'S PRIOR APPROVAL AND WILL BE COMPLETED BY TENANT/TENANT'S GC AT TENANT'S SOLE EXPENSE.
58. ALL ELECTRICAL PANELS TO BE MOUNTED ON PLYWOOD BACKER BOARD.
59. PANEL PHASE LOADS TO BE BALANCED WITHIN 10%.

GENERAL LIGHTING NOTES

A. WHERE LIGHT FIXTURE IS FOLLOWED BY "NL", THIS FIXTURE IS DESIGNATED AS A NIGHT LIGHT AND SHALL BE CONNECTED TO AN UNSWITCHED HOT CONDUCTOR.

B. UPPER CASE LETTER NEXT TO LIGHT FIXTURE DENOTES FIXTURE TYPE AND LOWER CASE LETTER DENOTES SWITCHING SCHEME.

C. ALL EMERGENCY FIXTURES SHALL BE CONNECTED TO AN UNSWITCHED HOT CONDUCTOR.

ELECTRICAL LEGEND

SYMBOL	DESCRIPTION
	EXHAUST FAN
	JUNCTION BOX
	BATTERY BACK UP EXIT LIGHT
	BATTERY BACK UP EMERGENCY LIGHT
	WALL SWITCH (SINGLE, DOUBLE,)
	WALL SWITCH (3 WAY, 4 WAY)
	WALL SWITCH (TIMER)
OS	OCCUPANCY SENSOR WALL SWITCH
	DUPLEX RECEPTACLE
	230 VOLT RECEPTACLE
	QUADRUPLEX RECEPTACLE
	FLOOR MOUNTED. FLUSH DUPLEX RECEPTACLE
	FLOOR MOUNTED. FLUSH QUAD. RECEPTACLE
	FLOOR MOUNTED. FLUSH 230 VOLT RECEPTACLE
CL	CEILING MOUNTED DUPLEX RECEPTACLE
	ELECTRICAL PANEL
	DISCONNECT SWITCH
TV	TELEVISION OUTLET
	TELEPHONE OUTLET
	TELEPHONE/DATA OUTLET
	DATA OUTLET
	FLOOR MTD. FLUSH TELEPHONE/DATA OUTLET
RJ45	QUAD. DATA OUTLET RJ45
	DISCONNECT SWITCH

ABBREVIATIONS:

ABOVE FINISH FLOOR= A.F.F.
COUNTER TOP LEVEL= C
GROUND FAULT INTERRUPTER= GFCI
VERIFY PRIOR TO INSTALL= VH
WEATHER PROOF= WP
KITCHEN EXHAUST FAN = KEF
WATER HEATER= WH
AUTHORITY HAVING JURISDICTION= A.H.J.
AIR COOLED CONDENSING UNIT= ACCU
AIR HANDLING UNIT= AHU
BELOW COUNTER= BC
PUSH BUTTON= PB
UNDER CABINET= UC
VAPOR PROOF= VP
ELECTRICAL CONTRACTOR=E.C.
BATHROOM EXHAUST FAN=BEF
RECIRCULATION PUMP=RCP

EXISTING CONDITIONS NOTES

STOP AND READ

THE CONTRACTOR AND SUB-CONTRACTORS **SHALL NOT INITIATE ANY WORK UNTIL EXISTING FIELD CONDITIONS ARE PROPERLY VERIFIED**. THIS SHALL HOLD TRUE FOR FIRST GENERATION AND 2ND GENERATION SPACES. WHEN DEMOLITION IS REQUIRED, THAT WILL BE PERMITTED TO EXPOSE CONDITIONS. THESE VERIFICATIONS SHALL INCLUDE BUT NOT LIMITED TO: DIMENSIONS BOTH HORIZONTALLY AND VERTICAL, ELECTRICAL SERVICE /PANELS LOCATION AND VOLTS/PHASE, LOCATION/QTY OF ROOF MOUNTED HVAC EQUIPMENT, CONFIRM THAT INTERIOR HVAC HUNG UNITS HAVE PROPER SUPPORT CONNECTIONS FOR EXISTING STRUCTURE, FIRE SPRINKLER MAIN RUNS, TOILET ROOM DIMENSIONS, DOOR SWING FOR DOORS TO REMAIN AND ETC. IF NOT VERIFIED AND DISCOVERED AT A LATER TIME, THE CONTRACTOR SHALL REIMBURSE THE ARCHITECT FOR THE REDESIGN FEE. THIS DOES NOT INCLUDE HIDDEN WORK I.E. PITCH OF SANITARY LINES, ACTUAL CONDITIONS OF EXISTING HVAC EQUIPMENT, STRUCTURAL COLUMNS/BEARING WALLS OR CONDITIONS OF GREASE INTERCEPTORS AND ETC.

LIGHTING FIXTURE SCHEDULE

SYMBOL	TYPE	DESCRIPTION	MANUFACTURER	CATALOG NUMBER	VOLT	LAMP WATTAGE	MOUNTING
	A	2x4 LED PANEL	CURRENT LIGHTING	SCALER SRP	120	33 WATTS	RECESSED
	B	6" LED DOWN LIGHT	ELCO LIGHTING	EL770LCDXA	120	20 WATTS	SURFACE
	D	16" LOW BAY LIGHT	ALPHABET LIGHTING	DELTA L	120	32 WATTS	BTM OF FIXTURE @9'-6" TO 10'-0" AF.F
	X1	EXIT SIGN-EMERGENCY LIGHT COMBO	LITHONIA LIGHTING	LHQM LED HO RO 5D	120	4.3 WATTS	CEILING/WALL
	Y2	EMERGENCY LIGHTS	LITHONIA LIGHTING	EU2-LED-HO-M6	120	2.1 WATTS	WALL
$T	T	TIMER WALL SWITCH	LEVITON	6124	120	-	WALL
$OS	OS	OCCUPANCY WALL SWITCH	LEVITON	ODS10	120	-	WALL
OS	OS	CEILING OCCUPANCY SENSOR	LEVITON	OZC10-UDW	120	-	CEILING
	(E)	EXISTING LIGHTS TO BE REPLACED	COMMERCIAL LIGHTING	ELI ER3-LED-900L-DIM10 -MVOLT-SPD-40K-90/ER3 -TL-1302-W	120	12	CEILING

LIGHT FIXTURE SCHEDULE NOTES:

REFER TO REFLECTED CEILING PLAN IN ARCHITECTURAL DRAWINGS FOR MORE INFORMATION ON COLORS AND TRIMS REQUIRED

(*) EXISTING FIXTURES ARE ACCEPTABLE, IF THEY NEED TO BE REPLACED, REPLACE W/ EXACT MATCH OR MATCH SCHEDULE

SUBSTITUTIONS TO THE ABOVE FIXTURE SCHEDULE MUST BE SUBMITTED 14 DAYS PRIOR TO BID & REVIEWED BY THE ARCHITECT, ENGINEER & OWNER. SUBSTITUTIONS WILL NOT BE REVIEWED AFTER THIS TIME. SUBMITTAL PACKAGES MUST INCLUDE COLOR, CUT SHEETS, ALL PHOTO METRICS & FIXTURE SAMPLES FOR ALL DECORATIVE FIXTURES, LANDSCAPE FIXTURES & OUTDOOR FIXTURES. WITHOUT THIS INFORMATION NO REVIEW WILL BE PROVIDED.

NOTE:

1. E.C. SHALL COORDINATE WITH ARCHITECT FOR FINAL FIXTURE COUNT AND TYPE.
2. COORDINATE EXACT CONTROL REQUIREMENTS WITH OWNER.
3. E.C SHALL PROVIDE REQUIRED POWER PACKS AND RELAYS SUITABLE FOR THE ABOVE LIGHT FIXTURES IN COORDINATION WITH THE LIGHTING VENDOR, BASE BID ACCORDINGLY.

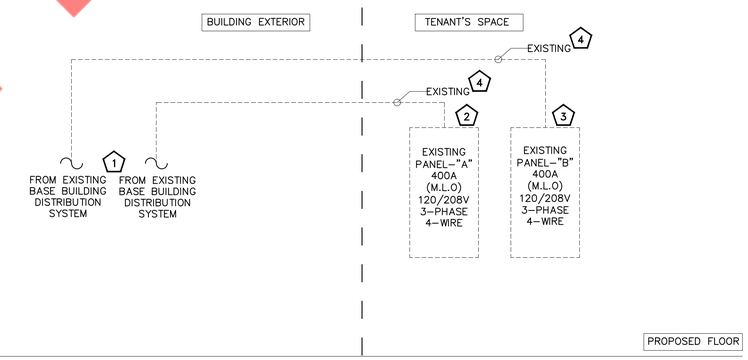

ELECTRICAL RISER KEYED NOTES:

1. EXISTING (2)400A, 120/208V, 3-PHASE, 4-WIRE ELECTRICAL SERVICE FEEDER UP TO THE THE ELECTRICAL PANELS FOR THE TENANT'S SPACE FROM THE EXISTING BASE BUILDING ELECTRICAL DISTRIBUTION. E.C. SHALL GET INFORMATION ABOUT THE EXISTING POWER DISTRIBUTION PRIOR TO COMMENCING ANY WORK AND INFORM ENGINEER ON RECORD FOR ANY DISCREPANCIES. BASE BID ACCORDINGLY.
2. EXISTING 400A(M.L.O), 120/208V, 3-PHASE, 4-WIRE ELECTRICAL PANEL "A"(NAME TO BE VERIFIED IN FIELD). E.C SHALL VERIFY EXACT SIZE, LOCATION AND OPERABLE CONDITION OF PANEL. REPLACE IF FOUND INOPERABLE. BASE BID ACCORDINGLY.
3. EXISTING 400A(M.L.O), 120/208V, 3-PHASE, 4-WIRE ELECTRICAL PANEL "B"(NAME TO BE VERIFIED IN FIELD). E.C SHALL VERIFY EXACT SIZE, LOCATION AND OPERABLE CONDITION OF PANEL. REPLACE IF FOUND INOPERABLE. BASE BID ACCORDINGLY.
4. EXISTING FEEDERS TO REMAIN. E.C. TO VERIFY OPERABLE CONDITION OF FEEDER'S IN FIELD AND PROVIDE NEW IF FOUND INOPERABLE. E.C SHALL COORDINATE WITH OWNER/LANDLORD/ARCHITECT FOR EXACT SCOPE OF WORK AND LIABILITIES PRIOR TO BID. INFORM ENGINEER ON RECORD IF ANY DISCREPANCY FOUND. BASE BID ACCORDINGLY.

ELECTRICAL RISER SYMBOLS

- NEW
- EXISTING ITEM/FEEDER TO REMAIN
- EXISTING ITEM/FEEDER TO BE DISCONNECTED & REMOVED

ELECTRICAL GENERAL NOTE:

1. ABOVE RISER DIAGRAM IS FOR REFERENCE PURPOSES ONLY. E.C. SHALL VERIFY EXACT POWER DISTRIBUTION IN FIELD AND INFORM ENGINEER ON RECORD FOR ANY DISCREPANCY.
2. E.C. SHALL VERIFY INCOMING SERVICE AMPERAGE, WIRE SIZING AND DISTRIBUTION.
3. ELECTRICAL CONTRACTOR TO COORDINATE FAULT CURRENT (Isc) RATING WITH UTILITY COMPANY AND AHJ PRIOR TO COMMENCING ANY WORK.
4. E.C. TO VERIFY OPERABLE CONDITIONS OF EXISTING DEVICES IN FIELD. REPLACE/RECTIFY IF FOUND IN OPERABLE. BASE BID ACCORDINGLY.
5. EXISTING ELECTRICAL DISTRIBUTION TO BE MAINTAINED AND UTILIZED TO SERVE PROJECT SPACE. POWER RISER DIAGRAM INDICATED FOR REFERENCE PURPOSES ONLY.

ELECTRICAL RISER | SCALE N.T.S. | 1

Property of NY Engineers

NY ENGINEERS

THIS DOCUMENT IS THE PROPERTY OF NY ENGINEERS AND SHALL NOT BE REPRODUCED WITHOUT THE WRITTEN CONSENT OF NY ENGINEERS.

GO GREEK YOGURT

REVISIONS DATES:

SR. NO.	DETAIL	DATE
01	BD COMMENTS	07/31/2024
02	DERM CMTS.	08/22/2024
03	DERM CMTS. 2	09/11/2024
04	DERM CMTS. 3	09/20/2024
05	DERM CMTS. 4	10/09/2024
06	DERM CMTS. 5	10/30/2024
07	PROJECT CORD.	01/10/2025
08	PROJECT CORD. 2	02/06/2025

ISSUE DATE: 02.20.24
PROJECT #:
DRAWN BY: NYE
CHECKED BY: NYE

ELECTRICAL PLAN NOTES AND RISER DIAGRAM

E-1

ELECTRICAL LIGHTING PLAN KEYED WORK NOTES:

A. CONNECT ALL EMERGENCY EGRESS LIGHTING FIXTURES TO THE NEAREST LIGHTING BRANCH CIRCUIT AHEAD OF ALL SWITCHING AND CONTROLS PER STATE AND LOCAL CODES.

B. COORDINATE EXACT LOCATION OF TIMER SWITCH BANK WITH OWNER/ARCHITECT.

C. EXTERIOR SIGNAGE. E.C SHALL COORDINATE EXACT POWER REQUIREMENT, EXACT LOCATION & MOUNTING DETAILS WITH OWNER & SIGN VENDOR.

D. PROVIDE CEILING MOUNTED RECEPTACLE FOR SHOW WINDOW AS PER NEC 210.62. VERIFY EXACT LOCATION WITH ARCHITECT.

E. LIGHTING NEAR ELECTRICAL PANELS SHALL NOT BE CONTROLLED BY ANY AUTOMATIC MEANS AND SHALL BE COMPLIED AS PER NEC 110.26(D).

F. EXHAUST FAN BEF-1(N),KEF-1(N),KEF-2(N) SHALL BE INTERLOCKED WITH AHU-1(E) OR PROVIDE 24-HOUR TIME CLOCK. E.C. TO COORDINATE WITH MECHANICAL DRAWINGS. COORDINATE FINAL REQUIREMENT AND INTERCONNECTION WITH OWNER.

G. EXISTING DOWN LIGHT DENOTED (E) IN THIS AREA SHALL BE REPLACED BY NEW DOWN LIGHTS. COORDINATE WITH OWNER/ARCHITECT FOR EXACT EXACT MAKE MODEL PRIOR TO PURCHASE. PROVIDE CONTROLS AS SHOWN IN PLAN. INFORM ENGINEER ON RECORD FOR ANY DISCREPANCY. BASE BID ACCORDINGLY.

ELECTRICAL LIGHTING PLAN GENERAL NOTES:

1. CONTRACTOR ADVISED TO UPDATE THE EMERGENCY LIGHT FIXTURES LOCATIONS/QUANTITY PER SITE REQUIREMENT UP ON FINAL INSPECTION OR PER LOCAL AHJ REQUIREMENT.

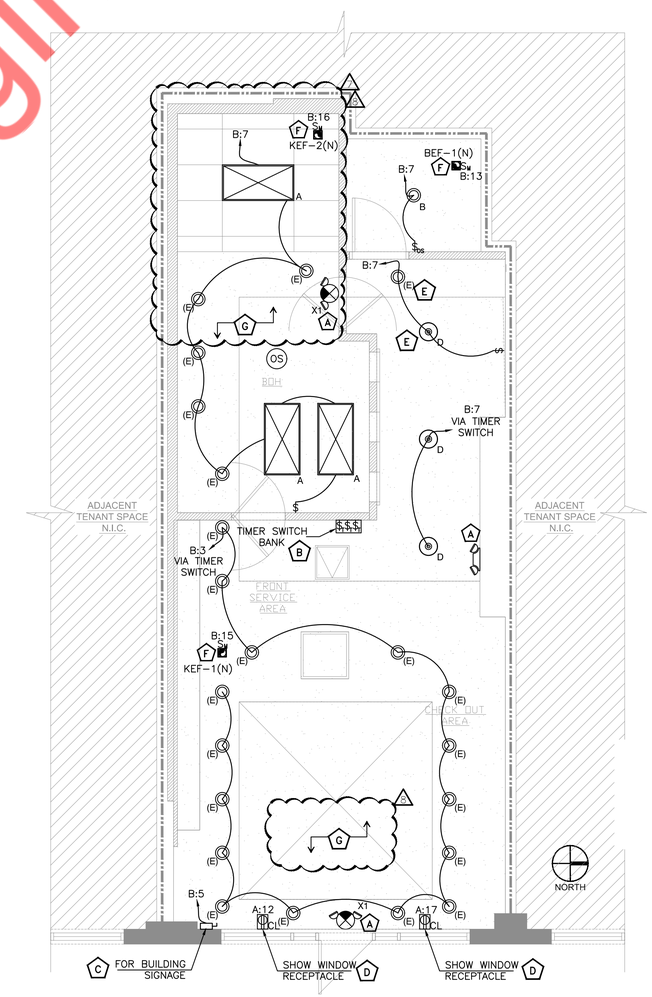

LIGHTING PLAN | SCALE 1/4" = 1'-0" | 1

Property of NY Engineers

NY ENGINEERS

THIS DOCUMENT IS THE PROPERTY OF NY ENGINEERS AND SHALL NOT BE REPRODUCED WITHOUT THE WRITTEN CONSENT OF NY ENGINEERS.

GO GREEK YOGURT

REVISIONS DATES:

SR. NO.	DETAIL	DATE
01	BD COMMENTS	07/31/2024
02	DERM CMTS.	08/22/2024
03	DERM CMTS. 2	09/11/2024
04	DERM CMTS. 3	09/20/2024
05	DERM CMTS. 4	10/09/2024
06	DERM CMTS. 5	10/30/2024
07	PROJECT CORD.	01/10/2025
08	PROJECT CORD. 2	02/06/2025

ISSUE DATE: 02.20.24
PROJECT #:
DRAWN BY: NYE
CHECKED BY: NYE

LIGHTING PLAN

E-2

POWER PLAN GENERAL NOTES:

1. ALL 125–VOLT THROUGH 250–VOLT RECEPTACLES SUPPLIED BY SINGLE–PHASE BRANCH CIRCUITS RATED 150 VOLTS OR LESS TO GROUND, 50 AMPERES OR LESS, AND ALL RECEPTACLES SUPPLIED BY THREE–PHASE BRANCH CIRCUITS RATED 150 VOLTS OR LESS TO GROUND, 100 AMPERES OR LESS, INSTALLED IN THE LOCATIONS SPECIFIED IN 210.8(B) SHALL HAVE GFCI PROTECTION. ALL THE KITCHEN EQUIPMENT SHALL HAVE GFI BREAKER IN PANELS.
2. E.C. SHALL COORDINATE WITH THE EQUIPMENT VENDOR FOR EXACT RECEPTACLE REQUIREMENT AND WITH ARCHITECT/OWNER FOR EXACT LOCATION AND MOUNTING HEIGHT OF THE RECEPTACLES IN THE FIELD.

POWER PLAN KEYED NOTES:

A. EXISTING 400A(M.L.O), 208/120V, 3–PHASE, 4–WIRE ELECTRICAL PANEL "A" (NAME TO BE VERIFIED AT FIELD). E.C SHALL VERIFY EXACT SIZE, LOCATION AND OPERABLE CONDITION OF PANEL. REPLACE IF FOUND INOPERABLE. BASE BID ACCORDINGLY.

B. EXISTING 400A(M.L.O), 208/120V, 3–PHASE, 4–WIRE ELECTRICAL PANEL "B" (NAME TO BE VERIFIED AT FIELD). E.C SHALL VERIFY EXACT SIZE, LOCATION AND OPERABLE CONDITION OF PANEL. REPLACE IF FOUND INOPERABLE. BASE BID ACCORDINGLY.

C. E.C SHALL VERIFY THE INSTALLATION OF ELECTRICAL EQUIPMENTS ARE IN COMPLIANCE WITH N.E.C. ARTICLE 110.26(A) AND (B). E.C. SHALL FIELD VERIFY THAT THE PANELS ARE UNOBSTRUCTED AND THE AREA WHERE THE PANELS ARE PLACED SHALL NOT BE USED AS A STORAGE SPACE.

D. PROVIDE (2) CAT 6 HOME RUN TO EACH POS STATION AND ONE (1) QUAD 20 AMPS RECEPTACLE FOR POS. COORDINATE WITH OWNER PRIOR TO ROUGH–IN FOR EXACT HEIGHT.

E. PROVIDE (1) DUPLEX RECEPTACLE AND (1) CAT6 DATA CABLE AND CONNECTION FOR EACH MENUBOARD. COORDINATE IN FIELD FOR FINAL LOCATION AND EXACT MOUNTING HEIGHT WITH OWNER.

F. MOTORIZED DAMPER (MD) SHALL BE INTERLOCKED WITH AHU–1(E). E.C. TO COORDINATE WITH MECHANICAL DRAWINGS. COORDINATE FINAL REQUIREMENT AND INTERCONNECTION WITH OWNER.

G. ELECTRICAL CONTRACTOR SHALL COORDINATE WITH THE PLUMBING CONTRACTOR FOR EXACT LOCATION AND POWER REQUIREMENT OF THE PLUMBING UNITS (WH–1, RCP–1, CP–1) IN THE FIELD. PROVIDE CIRCUIT AND CONTROL AS REQUIRED. 7

H. ELECTRICAL CONTRACTOR SHALL COORDINATE FOR EXACT LOCATION OF MECHANICAL EQUIPMENTS WITH MECHANICAL DRAWINGS.

I. ELECTRICAL CONTRACTOR SHALL COORDINATE DISCONNECT AND FUSE REQUIREMENT FOR MECHANICAL UNIT WITH MECHANICAL CONTRACTOR AND EQUIPMENT MANUFACTURER PRIOR TO ROUGH–IN AND PROVIDE AS REQUIRED. LOCATE AS REQUIRED TO MAINTAIN NEC CLEARANCES.

J. ELECTRICAL CONTRACTOR SHALL COORDINATE WITH #7_REFRIGERATOR DISPLAY CASE MANUFACTURER/VENDOR FOR EXACT POWER REQUIREMENT, EXACT MOUNTING HEIGHT. BASE BID ACCORDINGLY.

K. ELECTRICAL CONTRACTOR SHALL COORDINATE WITH #9_SOFT SERVE MACHINE MANUFACTURER/VENDOR FOR EXACT ELECTRICAL POWER/CONNECTION REQUIREMENT, EXACT MOUNTING HEIGHT BEFORE COMMENCING ANY WORK. BASE BID ACCORDINGLY. 7

L. ELECTRICAL CONTRACTOR SHALL COORDINATE WITH #15_ESPRESSO MACHINE MANUFACTURER/VENDOR FOR EXACT POWER REQUIREMENT, EXACT MOUNTING HEIGHT BEFORE COMMENCING ANY WORK. BASE BID ACCORDINGLY.

M. PROVIDE (2) QUAD RECEPTACLE AND (1) CAT6 DATA CABLE AND CONNECTION FOR IT RACK. E.C SHALL COORDINATE IN FIELD FOR FINAL LOCATION AND EXACT MOUNTING HEIGHT WITH OWNER.BASE BID ACCORDINGLY. 8

N. ELECTRICAL OUTLET FOR AUTHENTIC YOGURTERIA SIGN. E.C SHALL VERIFY EXACT LOCATION, MOUNTING HEIGHT WITH OWNER/ARCHITECT AT FIELD BEFORE COMMENCING ANY WORK. BASE BID ACCORDINGLY

O. ELECTRICAL OUTLET FOR LED LIGHT IN FRONT SERVICE AREA. E.C SHALL VERIFY EXACT LOCATION, MOUNTING HEIGHT WITH OWNER/ARCHITECT AT FIELD BEFORE COMMENCING ANY WORK. BASE BID ACCORDINGLY

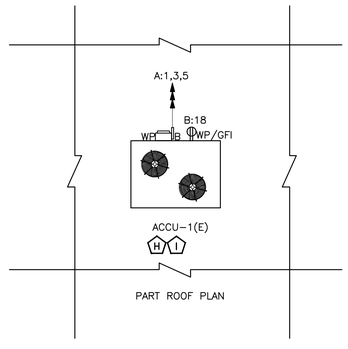

PART ROOF PLAN

ROOF PART PLAN | SCALE 1/4" = 1'-0" | 2

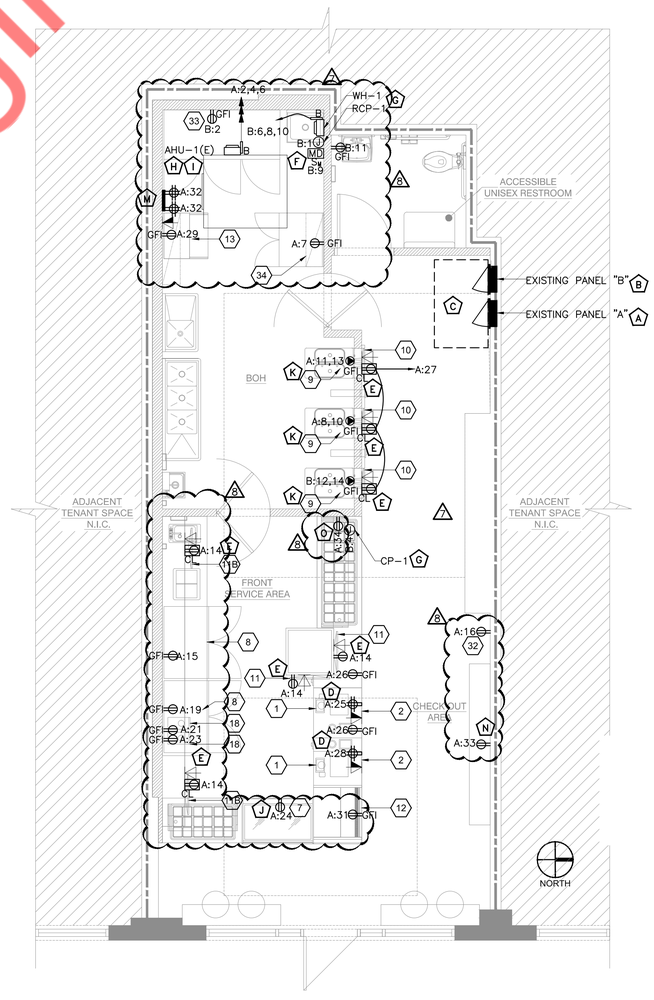

POWER PLAN | SCALE 1/4" = 1'-0" | 1

Property of NY Engineers

NY ENGINEERS

THIS DOCUMENT IS THE PROPERTY OF NY ENGINEERS AND SHALL NOT BE REPRODUCED WITHOUT THE WRITTEN CONSENT OF NY ENGINEERS.

GO GREEK YOGURT

REVISIONS DATES:

SR. NO.	DETAIL	DATE
01	BD COMMENTS	07/31/2024
02	DERM CMTS.	08/22/2024
03	DERM CMTS. 2	09/11/2024
04	DERM CMTS. 3	09/20/2024
05	DERM CMTS. 4	10/09/2024
06	DERM CMTS. 5	10/30/2024
07	PROJECT CORD.	01/10/2025
08	PROJECT CORD. 8	02/06/2025

ISSUE DATE: 02.20.24
PROJECT #:
DRAWN BY: NYE
CHECKED BY: NYE

POWER & ROOF PART PLAN

E-3

PANEL SCHEDULE:

PANEL:	A(E)													MOUNTING:	SURFACE		
208Y/120	VOLTS,		3	PHASE,			4	WIRE							LOCATION:	BOH	
MAIN CB	NA.			MLO	400A			BUS	EXISTING		MIN,				FED FROM:	EXISTING SERVICE 1	

CKT NO.	TRIP AMPS	DESCRIPTION OF LOAD	LOAD TYPE	LOAD (KVA)	MINIMUM BRANCH CIRCUIT	PER PHASE (KVA) A	B	C	MINIMUM BRANCH CIRCUIT	LOAD (KVA)	LOAD TYPE	DESCRIPTION OF LOAD	TRIP AMPS	CKT NO.
1			H	2.29		4.88				2.59	H			2
3	50-3P	ACCU-1(E.)	H	2.29	3#8, #10G, 3/4"C		4.88		3#8, #10G, 3/4"C	2.59	H	AHU-1(E)	40-3P	4
5			H	2.29				4.88		2.59	H			6
7	20	UNDERCOUNTER REFRIGERATOR (#34)	E	0.28	2#12, #12G, 3/4"C	3.08			3#10, #10G, 3/4"C	2.80	E	SOFT SERVE MACHINE(#9)	25-2P	8
9	20	SPARE					2.80			2.80	E			10
11	25-2P	SOFT SERVE MACHINE(#9)	E	2.80	3#10, #10G, 3/4"C			3.80	2#12, #12G, 3/4"C	1.00	R	SHOW WINDOW RECEPTACLE	20	12
13			E	2.80		3.52			2#12, #12G, 3/4"C	0.72	R	50" TV MENU BOARD (#11)	20	14
15	20	UNDER COUNTER REFRIGERATOR (#8)	E	0.28	2#12, #12G, 3/4"C		0.75		2#12, #12G, 3/4"C	0.47	E	MERKETEER MERCHANDISER(#32)	20	16
17	20	SHOW WINDOW RECEPTACLE	R	1.00	2#12, #12G, 3/4"C			1.00				SPARE	20	18
19	20	UNDER COUNTER REFRIGERATOR (#8)	E	0.28	2#12, #12G, 3/4"C	0.28						SPARE	20	20
21	20	BLENDER(#18)	E	1.50	2#12, #12G, 3/4"C		1.50					SPARE	20	22
23	20	BLENDER(#18)	E	1.50	2#12, #12G, 3/4"C			3.42	2#12, #12G, 3/4"C	1.92	E	REFRIGERATOR DISPLAY CASE (#7)	20	24
25	20	POS (#1)	R	0.36	2#12, #12G, 3/4"C	0.72			2#12, #12G, 3/4"C	0.36	E	SCALE(#2)	20	26
27	20	20" TV MENU BOARD(#10)	R	0.54	2#12, #12G, 3/4"C		0.90		2#12, #12G, 3/4"C	0.36	E	POS (#1)	20	28
29	20	ICE MACHINE(#13)	E	0.73	2#12, #12G, 3/4"C			1.45	2#12, #12G, 3/4"C	0.72	R	PHONE BOARD	20	30
31	20	GRAB & GO COOLER DISPLAY (#12)	E	0.90	2#12, #12G, 3/4"C	1.62			2#12, #12G, 3/4"C	0.72	R	RECEPTACLE: IT RACK	20	32
33	20	SIGNAGE	L	0.50	2#12, #12G, 3/4"C		1.00		2#12, #12G, 3/4"C	0.50	L	LIGHTING IN FOH AREA	20	34
35		SPACE						0.00				SPACE		36
37		SPACE				0.00						SPACE		38
39		SPACE					0.00					SPACE		40
41		SPACE						0.00				SPACE		42
				TOTAL LOAD (KVA)		14.09	11.83	14.55						

PANEL:	B(E)													MOUNTING:	SURFACE		
208Y/120	VOLTS,		3	PHASE,			4	WIRE							LOCATION:	BOH	
MAIN CB	NA			MLO	400A			BUS	EXISTING		MIN,				FED FROM:	EXISTING SERVICE 2	

CKT NO.	TRIP AMPS	DESCRIPTION OF LOAD	LOAD TYPE	LOAD (KVA)	MINIMUM BRANCH CIRCUIT	PER PHASE (KVA) A	B	C	MINIMUM BRANCH CIRCUIT	LOAD (KVA)	LOAD TYPE	DESCRIPTION OF LOAD	TRIP AMPS	CKT NO.
1	20	RECIRCULATION PUMP	O	0.09	2#12, #12G, 3/4"C	1.17			2#12, #12G, 3/4"C	1.08	E	3-DOOR REFRIGERATOR(#33)	20	2
3	20	LIGHTING FRONT SERVICE AREA	L	0.19	2#12, #12G, 3/4"C		0.40		2#12, #12G, 3/4"C	0.20	O	CONDENSATE PUMP	20	4
5	20	EXTERIOR SINAGE	L	0.50	2#12, #12G, 3/4"C			4.17		3.67	O			6
7	20	LIGHTING SEATING & WATING AREA, BOH, REST ROOM	L	0.30	2#12, #12G, 3/4"C	3.97			3#8, #10G, 3/4"C	3.67	O	WATER HEATER	40-3P	8
9	20	MOTORIZED DAMPER	M	0.10	2#12, #12G, 3/4"C		3.77			3.67	O			10
11	20	RECEPTACLE-REST ROOM	R	0.18	2#12, #12G, 3/4"C			2.98	3#10, #10G, 3/4"C	2.80	E	SOFT SERVE MACHINE(#9)	25-2P	12
13	20	BEF-1(N)	M	0.03	2#12, #12G, 3/4"C	2.83				2.80	E			14
15	20	KEF-1(N)	M	0.06	2#12, #12G, 3/4"C		0.13		2#12, #12G, 3/4"C	0.06	M	KEF-2(N)	20	16
17	20	SPARE						0.18	2#12, #12G, 3/4"C	0.18	R	RECEPTACLE ROOF	20	18
19		SPACE				0.00						SPARE	20	20
21		SPACE					0.00					SPARE	20	22
23		SPACE						0.00				SPARE	20	24
25		SPACE				0.00						SPACE		26
27		SPACE					0.00					SPACE		28
29		SPACE						0.00				SPACE		30
31		SPACE				0.00						SPACE		32
33		SPACE					0.00					SPACE		34
35		SPACE						0.00				SPACE		36
37		SPACE				0.00						SPACE		38
39		SPACE					0.00					SPACE		40
41		SPACE						0.00				SPACE		42
				TOTAL LOAD (KVA)		7.96	4.29	7.33						

PANEL SCHEDULE GENERAL NOTES:

A. ALL THE CIRCUITING SHOWN FOR THE PANEL "A", "B" IS FOR REFERENCE PURPOSE ONLY.
B. ELECTRICAL CONTRACTOR TO VERIFY THE EXACT PANEL SIZES AND INCOMING FEEDER SIZE.

PANEL SCHEDULE KEY NOTES:

1. E. C SHALL PROVIDE (34)20AMP, 1 POLE BREAKER IN THE PLACE OF (34)SPACE.
2. E. C SHALL PROVIDE (3)25AMP, 2 POLE BREAKER IN THE PLACE OF (6)SPACE.
3. E. C SHALL PROVIDE (2)20AMP, 1 POLE BREAKER IN THE PLACE OF (2)SPACE.
4. E. C SHALL PROVIDE (2)40AMP, 3 POLE BREAKER IN THE PLACE OF (6)SPACE.
5. E. C SHALL PROVIDE (1)50AMP, 3 POLE BREAKER IN THE PLACE OF (3)SPACE.

KITCHEN EQUIPMENT SCHEDULE:

EQUIPMENT SCHEDULE

ITEM NO.	DESCRIPTION	VOLTAGE	PHASE	AMPS	KVA	REMARK
1	POS	120	1	-	-	CONFIRM WITH VENDOR
2	POS SCALE	120	1	-	-	CONFIRM WITH VENDOR
7	REFRIGERATOR DISPLAY CASE	120	1	16.00	1.92	CONFIRM WITH VENDOR
8	UNDERCOUNTER REFRIGERATOR	120	1	2.70	0.32	CONFIRM WITH VENDOR
9	SOFT SERVE MACHINE	208	1	20.00	4.16	CONFIRM WITH VENDOR
10	20" TV MENU BOARD	120	1	-	-	CONFIRM WITH VENDOR
11	50" TV MENU BOARD	120	1	-	-	CONFIRM WITH VENDOR
12	GRAB & GO COOLER DISPLAY	120	1	7.50	0.90	CONFIRM WITH VENDOR
13	ICE MACHINE	120	1	6.05	0.73	CONFIRM WITH VENDOR
15	ESPRESSO MACHINE	208	1	22.11	4.60	CONFIRM WITH VENDOR
16	COFFEE MACHINE	120	1	13.70	1.64	CONFIRM WITH VENDOR
17	COFFEE GRINDER	120	1	9.00	1.08	CONFIRM WITH VENDOR
18	BLENDER	120	1	12.50	1.50	CONFIRM WITH VENDOR
32	MERKETEER MERCHANDISER	115	1	4.10	0.47	CONFIRM WITH VENDOR
33	3- DOOR REFRIGERATOR	115	1	7.60	0.87	CONFIRM WITH VENDOR
34	UNDERCOUNTER REFRIGERATOR	120	1	2.30	0.28	CONFIRM WITH VENDOR

LIGHTING CONTROL SCHEDULE:

LIGHTING CONTROLS SCHEDULE

PANEL NAME	CIRCUIT NUMBER	RELAY NUMBER	AREA DISCRIPTION	LIGHT FIXTURE TYPE	LOCAL SWITCH
B	3	1	FRONT SERVICE AREA	E	TIMER SWITCH
B	7	2	SEATING AREA & HALLWAY, BOH	A,D	TIMER SWITCH

Property of NY Engineers

NY ENGINEERS

THIS DOCUMENT IS THE PROPERTY OF NY ENGINEERS AND SHALL NOT BE REPRODUCED WITHOUT THE WRITTEN CONSENT OF NY ENGINEERS.

GO GREEK YOGURT

REVISIONS DATES:

SR. NO.	DETAIL	DATE
01	BD COMMENTS	07/31/2024
02	DERM CMTS.	08/22/2024
03	DERM CMTS. 2	09/11/2024
04	DERM CMTS. 3	09/20/2024
05	DERM CMTS. 4	10/09/2024
06	DERM CMTS. 5	10/30/2024
07	PROJECT CORD.	01/10/2025
08	PROJECT CORD.	02/06/2025

ISSUE DATE: 02.20.24
PROJECT #:
DRAWN BY: NYE
CHECKED BY: NYE

PANEL SCHEDULES

E-4

SCOPE OF WORK

PROVIDE ALL PLUMBING FOR A NEW YOGURT BAR AND CAFE WITHIN AN EXISTING BUILDING SHELL INCLUDING ALL WATER, SANITARY, GREASE SANITARY & VENT LINES AND CONNECT TO EXISTING UTILITIES. PROVIDE NEW ELECTRIC STORAGE WATER HEATER.

COORDINATE WITH GC AND MECHANICAL CONTRACTOR FOR ANY REQUIRED CONDENSATE LINES.

PLUMBING NOTES

1. ALL WORKMANSHIP AND MATERIALS SHALL BE IN STRICT ACCORDANCE WITH APPLICABLE LOCAL CODES, RULES AND ORDINANCES.
2. PLUMBING CONTRACTOR SHALL REVIEW ALL DRAWINGS OF THIS SET. CONTRACTOR TO VERIFY THAT ALL EQUIPMENT SHOWN AS EXISTING MATCHES THE DESCRIPTIONS AND SPECIFICATIONS SHOWN ON DRAWINGS AND SCHEDULES. IF DIFFERENT NOTIFY ARCHITECT/ENGINEER BEFORE BIDDING, ORDERING OR PRECEDING WITH WORK.
3. ALL EQUIPMENT WHICH IS TO REMAIN MUST BE REFURBISHED TO A LIKE NEW CONDITION.
4. PLUMBING CONTRACTOR SHALL VISIT THE JOB SITE AND THOROUGHLY FAMILIARIZE HIMSELF WITH ALL EXISTING CONDITIONS.
5. ALL MATERIALS SHALL BE NEW.
6. ALL WORK SHALL BE PERFORMED BY A LICENSED PLUMBING CONTRACTOR IN A FIRST CLASS WORKMANLIKE MANNER. THE COMPLETED SYSTEM SHALL BE FULLY OPERATIVE. ALL EXCAVATION AND BACKFILL AS REQUIRED FOR THIS PHASE OF CONSTRUCTION SHALL BE A PART OF THIS CONTRACT.
7. REQUIRED INSURANCE SHALL BE PROVIDED BY THE PLUMBING CONTRACTOR FOR PROTECTION AGAINST PUBLIC LIABILITY AND PROPERTY DAMAGE FOR THE DURATION OF THE WORK.
8. PLUMBING CONTRACTOR SHALL SECURE AND PAY FOR ALL PERMITS, FEES, INSPECTION AND TESTS. PLUMBING CONTRACTOR TO OBTAIN PERMIT AND APPROVED SUBMITTALS PRIOR TO BEGINNING WORK OR ORDERING EQUIPMENT. PLUMBING CONTRACTOR MUST BE PRESENT FOR ALL INSPECTIONS OF HIS WORK BY REGULATORY AUTHORITIES.
9. DRAWINGS ARE DIAGRAMMATIC. DO NOT SCALE FOR THE EXACT LOCATION OF FIXTURES, PIPING, EQUIPMENT, ETC.
10. ALL WORK SHALL BE COORDINATED WITH OTHER TRADES TO AVOID INTERFERENCE WITH THE PROGRESS OF CONSTRUCTION. REPORT ANY DISCREPANCY TO ENGINEER/ARCHITECT PRIOR TO BEGINNING CONSTRUCTION.
11. VERIFY LOCATION, SIZE, DIRECTION OF FLOW AND INVERTS OF ALL EXISTING UTILITIES PRIOR TO BEGINNING OF CONSTRUCTION. ADVISE ENGINEER OF ANY DISCREPANCIES.
12. EXPOSED WATER PIPING SHALL BE TYPE "L" COPPER FOR 2" AND UNDER. WATER PIPING IN WALLS AND UNDERGROUND MAY BE "PEX" TYPE PIPING THAT MEETS ANSI/NSF STANDARD 61.
13. SOIL, WASTE AND VENT PIPING SHALL BE PVC BUT MAY NOT RUN THRU RATED ASSEMBLIES OR IN PLENUMS.
14. ALL FIXTURES MUST BE PROVIDED WITH READILY ACCESSIBLE STOPS AND APPROPRIATELY MARKED ACCESS PANELS. COORDINATE LOCATIONS WITH GENERAL CONTRACTOR PRIOR TO INSTALLATION.
15. FURNISH AND INSTALL APPROVED AIR CHAMBERS AT EACH PLUMBING FIXTURE GROUP AS PER CODE AND WITH GOOD ENGINEERING PRACTICE.
16. DIELECTRIC COUPLINGS ARE REQUIRED BETWEEN ALL DISSIMILAR METAL IN PIPING AND EQUIPMENT CONNECTIONS; EXCEPT AT WATER HEATER AS PER CODE.
17. ISOLATE COPPER PIPE FROM HANGER OR SUPPORTS WITH ISOLATOR PAD.
18. ALL FIRE RATED FLOOR AND WALL PENETRATIONS SHALL BE PROPERLY PROTECTED FROM FIRE, SMOKE AND WATER PENETRATION BY FILLING VOIDS BETWEEN PIPE AND WALL/FLOOR SLEEVES WITH FIRE RATED FOAM, TO ACHIEVE THE SAME RATING AS WALLS OR FLOORS AS PART OF THE PLUMBER'S WORK.
19. PLUMBING CONTRACTOR SHALL GUARANTEE ALL MATERIALS AND WORKMANSHIP FREE FROM DEFECTS FOR A PERIOD OF NOT LESS THAN ONE (1) YEAR FROM DATE OF CERTIFICATE OF OCCUPANCY. CORRECTION OF ANY DEFECTS SHALL BE COMPLETED WITHOUT ADDITIONAL CHARGE WITHIN 72 HOURS OF NOTIFICATION AND SHALL INCLUDE REPLACEMENT OR REPAIR OF ANY OTHER PHASE OF THE INSTALLATION WHICH MAY HAVE BEEN DAMAGED. PROVIDE COPY TO LL.
20. STUDOR MINI/MAXI AIR ADMITTANCE VALVES MAY NOT BE USED AS AN ALTERNATE TO VENT PIPING THRU ROOF.
21. PROVIDE CHROME PLATED COMBINATION COVER PLATE AND CLEAN OUT PLUG OR ACCESS PANEL FOR ALL CLEANOUTS.
22. NO COMBUSTIBLE MATERIAL TO BE USED IN MECHANICAL ROOMS OR IN CEILING SPACES WHERE USED AS RETURN AIR PLENUMS.
23. NO WATER, SANITARY OR DRAINAGE PIPING PERMITTED IN ELECTRICAL OR ELEVATOR EQUIPMENT ROOMS.
24. WATER PIPING INSULATION SHALL BE 1" THICK ARMAFLEX INSTALLED IN ACCORDANCE WITH MANUFACTURER'S INSTRUCTIONS FOR ALL HOT WATER PIPING. WHERE DOMESTIC WATER TEMPERATURES CAN CAUSE SWEATING, ALL COLD WATER PIPING SHALL BE INSULATED WITH 1/2" THICK ARMAFLEX INSULATION.
25. CONDENSATE DRAIN LINES TO BE RUN UNDER SLAB IN PVC SCH40 PIPE AND STUBBED OUT OF WALL TO UNIT. TIE-IN OF A/C TO BE BY OTHERS. PVC PIPING WITH 1/2" THICK ARMAFLEX INSULATION MAY BE USED IN LOCATIONS WHERE ALLOWED BY LOCAL CODES. SEE PLUMBING DRAWINGS FOR SIZE AND LOCATION OF PIPING. PVC WILL BE MIN. SCHEDULE 40 FOR SIZE AND LOCATION OF PIPING. PVC WILL BE MIN. SCHEDULE 40.
26. PROVIDE ANGLE STOPS ON ALL WATER SERVICE LINES TO FIXTURES FOR INDIVIDUAL SHUT-OFF.
27. NO JOINTS UNDERGROUND FOR COPPER.
28. PLUMBING FIXTURES SHALL COMPLY WITH 2023 FBC-PLUMBING, 8TH EDITION.
29. WATER HAMMER ARRESTORS AS PER 2023 FBC-PLUMBING, 8TH EDITION.
30. PLUMBING CONTRACTOR SHALL REVIEW ALL BID DOCUMENTATION.
31. PLUMBING CONTRACTOR SHALL REVIEW WALL FINISHES @ LOCATION REQUIRING BARRIER-FREE COMPLIANCE (EXAMPLE: CENTER LINE TO TOILET).
32. CONSTRUCTION "AS BUILT" DRAWINGS AND DOCUMENTS SHALL BE PROVIDED TO THE OWNER WITHIN 30 DAYS AFTER THE DATE OF ACCEPTANCE. PROVIDE A COPY TO LL.
33. OPERATION MANUALS AND MAINTENANCE MANUALS SHALL BE PROVIDED TO THE BUILDING OWNER. PROVIDE A COPY TO LL.

GREASE TRAP PERMIT

PLUMBING LEGENDS

—SAN—	SANITARY SEWER PIPING
—V—	VENT PIPING
—GSAN—	GREASE SANITARY SEWER PIPING
	COLD WATER PIPING
	EXISTING COLD WATER PIPING
	HOT WATER PIPING
	HOT WATER RETURN PIPING
	PIPE UP
	PIPE DROP
WCO	WALL CLEAN OUT
	CAPPED END OF PIPE
	P-TRAP
CW	COLD WATER
EX.CW	EXISTING COLD WATER
HW	HOT WATER
HWR	HOT WATER RETURN
	GATE VALVE
	CHECK VALVE
	BALANCING VALVE
FD	FLOOR DRAIN
I.W.	INDIRECT WASTE
FFD	FUNNEL DRAIN
	POINT OF CONNECTION
	THERMOSTATIC MIXING VALVE

FIXTURE BRANCH SCHEDULES

FIXTURE	COLD WATER	HOT WATER	WASTE	VENT
WATER CLOSET(E) (FLUSH VALVE)	E	--	E	E
LAVATORY	1/2"	1/2"	2"	1-1/2"
3 COMPARTMENT SINK	3/4"	3/4"	I.W.	-
HAND SINK/ DROP IN HAND SINK	1/2"	1/2"	2"	1-1/2"
PREP SINK	1/2"	1/2"	I.W.	-
MOP SINK	3/4"	3/4"	3"	2"
FLOOR SINK / FUNNEL DRAIN	--	--	2"/3"/4"	2"

7

ENERGY CONSERVATION NOTES

1. AS PER 2023 FBC-ENERGY CONSERVATION CODE SECTION C404.4, PIPING FROM A WATER HEATER TO THE TERMINATION OF HEATED WATER FIXTURE SUPPLY PIPE SHALL BE INSULATED IN ACCORDANCE WITH TABLE C403.2.10 OF MINIMUM PIPE INSULATION THICKNESS.

MINIMUM PIPE INSULATION THICKNESS							
FLUID OPERATING TEMPERATURE RANGE AND USAGE (°F)	INSULATION CONDUCTIVITY		NOMINAL PIPE OR TUBE SIZE (INCHES)				
	CONDUCTIVITY BTU· IN./(H· FT2· °F)	MEAN RATING TEMPERATURE, °F	<1	1 TO <1½	1½ TO <4	4 TO <8	>8
141-200	0.25-0.29	125	1.5	1.5	2	2	2
105-140	0.21-0.28	100	1.0	1.0	1.5	1.5	1.5
40-60	0.21-0.27	75	0.5	0.5	1.0	1.0	1.0

2. AS PER 2023 FBC-ENERGY CONSERVATION CODE SECTION C404.6.1, AUTOMATIC CONTROLS SHALL BE INSTALLED THAT LIMITS THE OPERATION OF A RECIRCULATING PUMP AND THE SYSTEM RETURN PIPE SHALL BE A DEDICATED RETURN PIPE OR A COLD WATER SUPPLY PIPE.
3. AS PER 2023 FBC-ENERGY CONSERVATION CODE SECTION C404.7, PUMPS SHALL HAVE CONTROLS THAT COMPLY WITH BOTH OF THE FOLLOWING:
   A. THE CONTROL SHALL START THE PUMP UPON RECEIVING A SIGNAL FROM THE ACTION OF A USER OF A FIXTURE OR APPLIANCE, SENSING THE PRESENCE OF A USER OF A FIXTURE OR SENSING THE FLOW OF HOT OR TEMPERED WATER TO A FIXTURE FITTING OR APPLIANCE.
   B. THE CONTROL SHALL LIMIT THE TEMPERATURE OF THE WATER ENTERING THE COLD-WATER PIPING TO 104°F (40°C).

EXISTING CONTIDITONS NOTES

STOP AND READ
THE CONTRACTOR AND SUB-CONTRACTORS **SHALL NOT INITIATE ANY WORK UNTIL EXISTING FIELD CONDITIONS ARE PROPERLY VERIFIED**. THIS SHALL HOLD TRUE FOR FIRST GENERATION AND 2ND GENERATION SPACES. WHEN DEMOLITION IS REQUIRED, THAT WILL BE PERMITTED TO EXPOSE CONDITIONS. THESE VERIFICATIONS SHALL INCLUDE BUT NOT LIMITED TO: DIMENSIONS BOTH HORIZONTALLY AND VERTICAL, ELECTRICAL SERVICE /PANELS LOCATION AND VOLTS/PHASE, LOCATION/QTY OF ROOF MOUNTED HVAC EQUIPMENT, CONFIRM THAT INTERIOR HVAC HUNG UNITS HAVE PROPER SUPPORT CONNECTIONS FOR EXISTING STRUCTURE, FIRE SPRINKLER MAIN RUNS, TOILET ROOM DIMENSIONS, DOOR SWING FOR DOORS TO REMAIN AND ETC. IF NOT VERIFIED AND DISCOVERED AT A LATER TIME, THE CONTRACTOR SHALL REIMBURSE THE ARCHITECT FOR THE REDESIGN FEE. THIS DOES NOT INCLUDE HIDDEN WORK I.E. PITCH OF SANITARY LINES, ACTUAL CONDITIONS OF EXISTING HVAC EQUIPMENT, STRUCTURAL COLUMNS/BEARING WALLS OR CONDITIONS OF GREASE INTERCEPTORS AND ETC.

RESTROOM FIXTURE SCHEDULE

Item No.	Qty.	Description	Manufacturer	Model	WATER Hot	WATER Cold	WASTE Waste	Usage	Spec
A	1	WATER CLOSET	EXISTING TO REMAIN			E	E		
	1	ELONGATED SEAT	EXISTING TO REMAIN						
B	1	LAV	AMERICAN STANDARD	9024001EC.020			2"		
B1	1	***LAV FAUCET	AMERICAN STANDARD	702B305.002	1/2"	1/2"		0.5	GPM
TMV	4	THERMAL MIXING VALVES	WATTS	LFMMV	1/2"	1/2"			
--	1	INSULATED PLUMBING COVERS	PLUMBEREX	HANDI SHIELD					

KITCHEN EQUIPMENT PLUMBING SCHEDULE

Item No.	Qty.	Description	MANUFACTURER	MODEL	WATER Hot	WATER Cold	WASTE Direct	WASTE Indirect
6	2	DROP-IN TOPPING STATION	ATLAS METAL	WIC-5				3/4"
13	1	ICE MAKER W/BIN	COLDLINE	UC-48R		1/2"		3/4"
25	1	***DROP IN HAND SINK	ADVANCE TABCO	DBS-1	1/2"	1/2"	1-1/2"	
25A	1	***HAND SINK	ADVANCE TABCO	7-PS-87	1/2"	1/2"	1-1/2"	
26	1	PREP SINK	TURBO AIR	TSA-1-12-L1				1-1/2"
26A	1	***FAUCET- PREP SINK	T&S BRASS	5F-8WLX08	1/2"	1/2"		
27	1	3 COMPARTMENT SINK	ADVANCE TABCO	FC-3-1620-18L				3 @ 1-1/2"****
27A	1	FAUCET- 3 COMPARTMENT SINK	T&S BRASS	B-0133A120B08	3/4"	3/4"		
28	1	MOP SINK	ADVANCE TABCO	8-OP-16			3"	
28A	1	FAUCET- MOP SINK	T&S BRASS	B0665-CR-BSTR	3/4"	3/4"		
29	1	WATER HEATER+	REFER TO SCHEDULE	REFER TO SCHEDULE				
FFD	6	FUNNEL DRAIN	-	-			3"	

*PROVIDE TRAP PRIMERS FOR ALL FLOOR DRAINS. +HOT WATER 140°F. ***MIXING VALVE REQUIRED.

NOTE: MAXIMUM WATER CONSUMPTION FLOW RATES AS PER MIAMI DADE CODE OF ORDINANCE / CHAPTER 8 / ARTICLE III. / SECTION 8-31

1. MAXIMUM FLOW RATE OF PUBLIC LAVATORY FAUCET TO BE 0.5 GPM AT 60 PSI.
2. MAXIMUM FLOW RATE OF SINK FAUCET TO BE 1.5 GPM AT 60 PSI.
3. MAXIMUM FLOW RATE OF WATER CLOSET TO BE 1.28 GALLONS PER FLUSHING CYCLE.

SPACE INFORMATION

TOTAL NUMBER OF SEATS	17
TYPE OF FOOD ESTABLISHMENT	ICE CREAM PARLOR
OPERATION DAYS	7
OPERATION HOURS/ DAY	MON - THU = 15 H/DAY FRI - SUN = 16 H/DAY
TOTAL AREA	830 SQ. FT.

RER-DERM FOG Control Device (FCD) Installation Inspection

Approval Date:	
Inspector:	

DERM's FCD Installation Inspection Required Prior to Plumbing Final for all Municipal projects. Failure to secure DERM's FCD Installation Inspection will result in disapproval of Final Inspection by the Municipal Building Official, pursuant to Section 24.42-6, MDC Code.

To schedule DERM's FCD Installation inspection for Municipal projects send an email to **iFOG2@miamidade.gov**, 24 hours prior to the desired date. Provide the DERM-Grease approved process M-number, complete address of the site, folio number, and contact person name and phone number.

RER-DERM Summary Block

Hydromechanical FOG Control Device (H-FCD)

Required Information	Tank No. 1	Tank No. 2	Tank No. 3	Tank No. 4
Capacity (gpm)	100 GPM	100 GPM		
FOG Load Capacity (lbs) at 99% Efficiency	2817	2817		
Manufacturer	Schier	Schier		
Model No.	GB-500-B	GB-500-B		
3rd Party Certifier (i.e., PDI, CSA, ASME)	ASME A112.14.3	ASME A112.14.3		
Interceptor Monitoring Alarm Model No.	N/A	N/A		
Interceptor Monitoring Device Model No.	N/A	ATS G5-IMD		
Solid Separator manufacturer and model	Schier Si-500			
Sampling port manufacturer and model	Schier SV10			

Updated: 9/8/2022

The FCD, and associated appurtenances on FOG-approved stamped sheets in this set must be installed on site. Equivalent or similar equipment is not accepted by this Division. Should the FOG-approved plan sheets be voided and/or revised, they shall be submitted to the Building Department, and DERM-Grease accordingly for approval.

ALL EQUIPMENT LABELS MUST VISIBLE AT THE TIME OF THE DERM/BUILDING INSPECTION, AND REMAIN VISIBLE THEREAFTER

Property of NY Engineers

NY ENGINEERS

THIS DOCUMENT IS THE PROPERTY OF NY ENGINEERS AND SHALL NOT BE REPRODUCED WITHOUT THE WRITTEN CONSENT OF NY ENGINEERS.

GO GREEK YOGURT

REVISIONS DATES:

SR. NO.	DETAIL		DATE
01	BD COMMENTS	1	07/31/2024
02	DERM CMTS.	2	08/22/2024
03	DERM CMTS. 2	3	09/11/2024
04	DERM CMTS. 3		09/20/2024
05	DERM CMTS. 4		10/09/2024
06	DERM CMTS. 5	6	10/30/2024
07	PROJECT CORD.	7	01/10/2025
08	PROJECT CORD.	8	02/06/2025

ISSUE DATE: 02.20.24
PROJECT #:
DRAWN BY: NYE
CHECKED BY: NYE

GENERAL NOTES AND SCHEDULES

P-1

PER FLORIDA PLUMBING CODE SECTION 1003.3.4, IN ACCORDANCE WITH PDI G101 SEC 8.3.1 SIZED BY PIPE SIZE, *1 BASED ON MANNING'S, PIPE DIAMETER, AND 1/8" SLOPE

	PIPE SIZE	MINIMUM SLOPE	GPM*1 PEAK FLOW	MINIMUM FLOW (PER CH.24-42.6) PDI-G101 8.4	MAX DFU'S	ACTUAL DFU	GPM BASED ON DFU
STEP 1. FLOW	4"	1/8" PER FT	100	50	180	38	19

LOW GREASE	0.005 LBS/MEAL (NO FLATWARE)	ICE CREAM PARLOR

SEATS x TURNS x MPD x GPPM x POF = GREASE CAPACITY NEEDED IN LBS.

	NUMBER OF SEATS	TURNS PER SEAT	MEALS PER DAY	GREASE PRODUCTION (LBS.) PER MEAL	POF IN DAYS	GREASE CAPACITY NEEDED IN LBS.	DESCRIPTION
STEP 2. /SPACE	17	4	68	0.005	90	30.6	INDOOR DINING
			TOTAL GREASE CAPACITY NEEDED			30.6	

SCHIER INTERCEPTORS MEETS THE DERM 99% EFFICIENCY AND PH OF 3	MODEL	QTY	GPM	GREASE CAPACITY IN LBS.	COMMENTS
ASME A112.14.3	GB-500-B	2	100	2817	(EXISTING)

GENERAL NOTES

1. UNLESS OTHERWISE NOTED, SLOPE OF DRAINAGE SYSTEM TO BE 1/16" PER FOOT OF RUN FOR PIPE 8" AND OVER, 1/8" PER FOOT FOR PIPE 3" TO 6" AND 1/4" PER FOOT FOR PIPE 2-1/2" AND SMALLER. VENT PIPING SHALL BE PITCHED TOWARDS DRAIN.
2. CONTRACTOR TO FIELD VERIFY FEASIBILITY OF SLAB PENETRATION AS PER STRUCTURAL REQUIREMENT.
3. ALL MATERIAL INDICATED AND IMPLIED ON THESE DRAWINGS SHALL BE NEW UNLESS OTHERWISE NOTED.
4. ALL CLEANOUTS TO BE ACCESSIBLE.
5. CONTRACTOR TO FIELD VERIFY THE EXISTING SANITARY, GREASE SANITARY AND VENT LOCATION AND ROUTING. MAKE NECESSARY CHANGES TO NEW PIPING AS PER THE EXISTING SITE CONDITION.
6. THE GREASE TRAP USED FOR THE TENANT'S SPACE HAS BEEN PERMITTED, INSTALLED AND INSPECTED FOR TENANT'S FUTURE CONNECTION. REFER SHEET P-1 FOR GREASE TRAP PERMIT

SANITARY PLAN & RISER KEY NOTES

1. CONNECT NEW 4" GREASE SANITARY LINE TO EXISTING GREASE SANITARY LINE IN / NEARBY SPACE WITH EXISTING GREASE INTERCEPTOR. CONTRACTOR TO FIELD VERIFY THE SIZE, LOCATION & INVERT OF EXISTING GREASE SANITARY LINE AND MAKE NECESSARY CHANGES IF REQUIRED. REFER TO CONTINUATION ON SHEET P-4.
2. NOT USED.
3. CONNECT NEW 2" SANITARY LINE TO EXISTING SANITARY MAIN LINE OF ADEQUATE SIZE IN SPACE. CONTRACTOR TO FIELD VERIFY THE SIZE, LOCATION & INVERT OF EXISTING SANITARY LINE AND UPGRADE IF REQUIRED.
4. EXISTING WATER CLOSET TO REMAIN WITH EXISTING SANITARY AND VENT CONNECTION, ASSOCIATED ACCESSORIES AND FITTINGS. CONTRACTOR TO FIELD VERIFY THE CONDITION OF EXISTING PIPING AND REPLACE IF REQUIRED
5. CONNECT NEW 3" VENT LINE TO EXISTING VENT LINE IN SPACE OF ADEQUATE SIZE. CONTRACTOR TO FIELD VERIFY THE SIZE & LOCATION OF EXISTING VENT LINE AND UPGRADE IF REQUIRED.
6. ROUTE INDIRECT WASTE FROM DROP-IN TOPPING STATION TO FUNNEL DRAIN WITH APPROVED AIRGAP.
7. ROUTE INDIRECT WASTE FROM ICE BIN TO FUNNEL DRAIN WITH APPROVED AIRGAP.
8. ROUTE INDIRECT WASTE FROM ICE MAKER TO FUNNEL DRAIN WITH APPROVED AIRGAP.
9. ROUTE INDIRECT WASTE FROM 3-COMP SINK TO FUNNEL DRAIN WITH APPROVED AIRGAP.
10. ROUTE INDIRECT WASTE FROM PREP SINK TO FUNNEL DRAIN WITH APPROVED AIRGAP.

DRAIN PUMP SCHEDULE

MANUFACTURER & MODEL	LIBERTY PUMPS MODEL 406
EQUIPMENT TAG	CP-1
STATUS	NEW
GPM @ HEAD	14GPM @ 15 FEET
HP	1/6
V/PH/HZ	115/1/60
AMPS	1.7
WEIGHT	13.5 LBS
INLET SIZE	1-1/2"
DISCHARGE SIZE	1-1/2"

NOTE:

1. CONTRACTOR TO PROVIDE REQUIRED ACCESSORIES AND FITTINGS REQUIRED FOR A COMPLETE INSTALLATION.

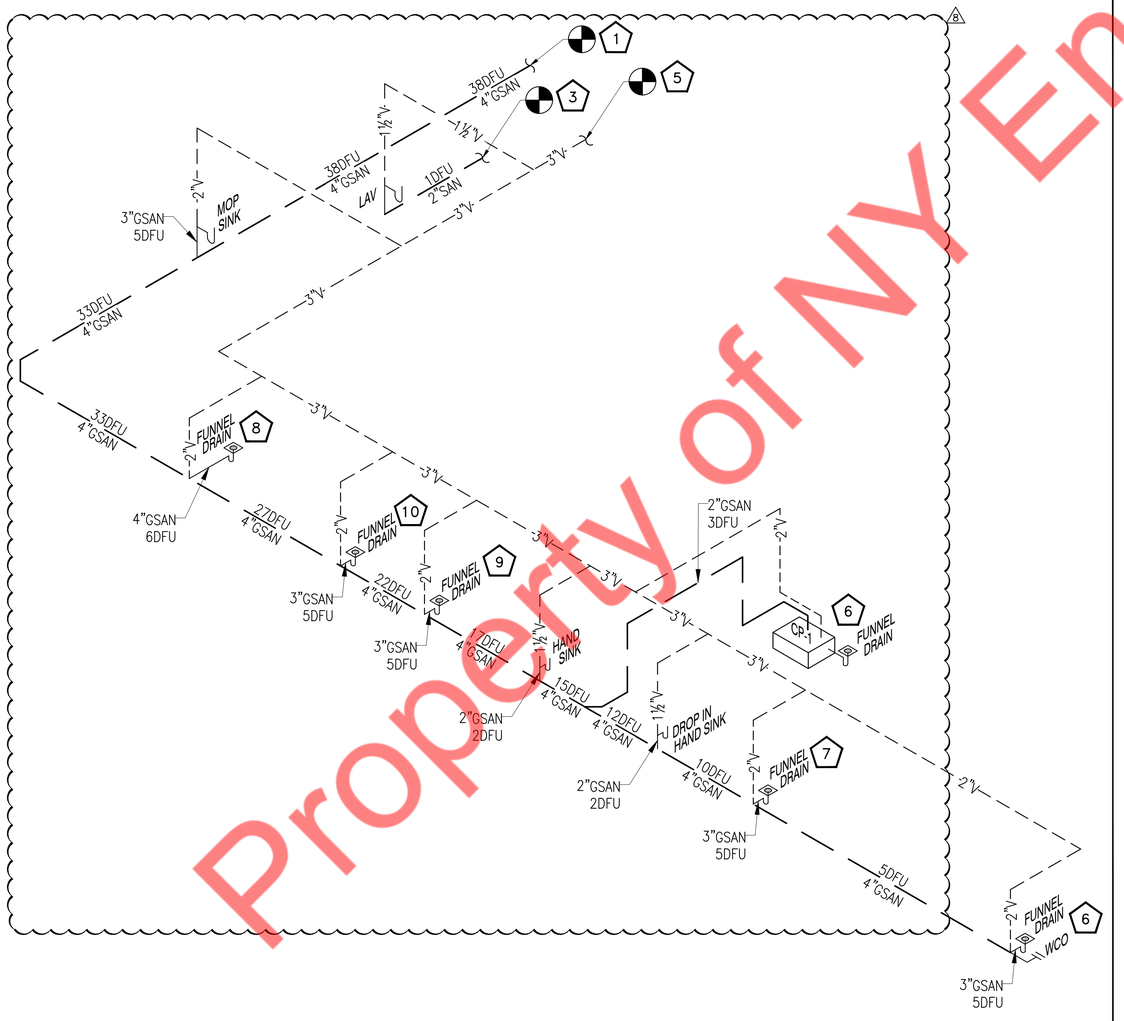

SANITARY RISER — SCALE N.T.S. — 2

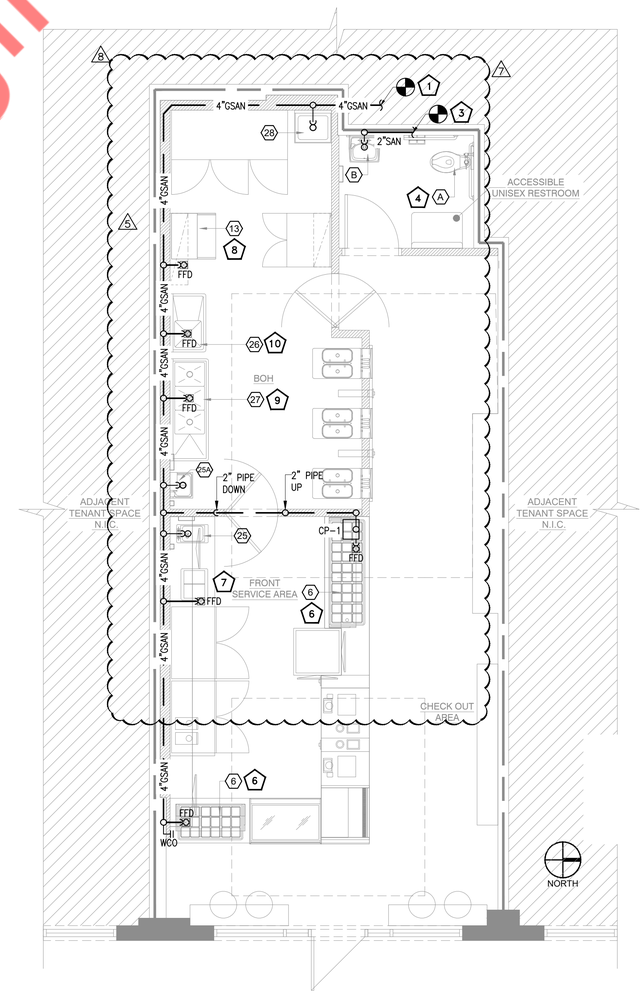

SANITARY PLAN — SCALE 1/4" = 1'-0" — 1

Property of NY Engineers

NY ENGINEERS

THIS DOCUMENT IS THE PROPERTY OF NY ENGINEERS AND SHALL NOT BE REPRODUCED WITHOUT THE WRITTEN CONSENT OF NY ENGINEERS.

GO GREEK YOGURT

REVISIONS DATES:

SR. NO.	DETAIL		DATE
01	BD COMMENTS		07/31/2024
02	DERM CMTS.	2	08/22/2024
03	DERM CMTS. 2	3	09/11/2024
04	DERM CMTS. 3	4	09/20/2024
05	DERM CMTS. 4	5	10/09/2024
06	DERM CMTS. 5		10/30/2024
07	PROJECT CORD.	7	01/10/2025
08	PROJECT CORD.	8	02/06/2025

ISSUE DATE: 02.20.24
PROJECT #:
DRAWN BY: NYE
CHECKED BY: NYE

PLUMBING SANITARY PLAN AND RISER

P-2

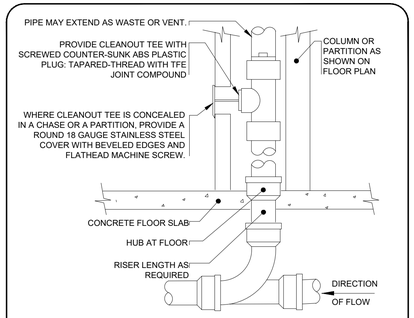

WALL CLEANOUT

NOT TO SCALE

WALL CLEANOUT DETAIL NOTES

1) PROVIDE WCO WHERE SHOWN ON PLAN, AND ON SANITARY WASTE BRANCHES NOT SERVED WITH A FLOOR CLEANOUT.
2) LOCATE ABOVE FIXTURE FLOOR RIM WITHIN 4' OF FLOOR.
3) CONSULT LOCAL CODES FOR OTHER WCO REQUIREMENTS.
4) LONG SWEEP AT END OF LINE OR COMBINATION WYE AND EIGHT BEND IN RUN OF LINE.
5) CLEAN OUT FACE SHALL BE WITHIN 4" OF WALL SURFACE. PROVIDE A PIPE EXTENSION IF REQUIRED.

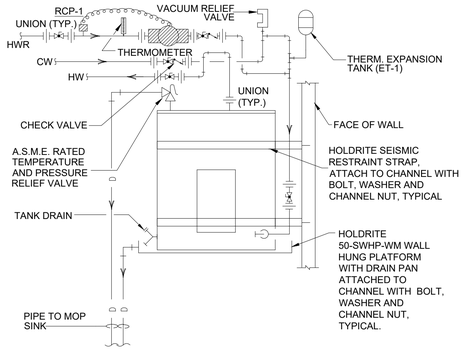

ELECTRIC WATER HEATER (WH-1)

NOT TO SCALE

GENERAL NOTES

1. CW/HW/HWR PIPING TO BE PROVIDED WITH INSULATION AS PER 2023 FBC-ENERGY CONSERVATION CODE (REFER SHEET P-1).
2. PROVIDE BRANCH PRV IF PRESSURE EXCEEDS 80 PSI.
3. PROVIDE ACCESS PANELS FOR WATER HAMMER ARRESTOR & SHUT-OFF VALVES AS REQUIRED.
4. WATER HEATERS DRAIN SPILLS TO NEW MOP SINK.
5. CONTRACTOR TO PROPERLY CAP ALL THE EXISTING PIPING FROM EXISTING PLUMBING FIXTURES WHICH ARE NOT IN USE OR DEMOLISHED.

WATER KEY NOTES

1. CONNECT NEW 1-1/4" CW LINE TO EXISTING MAIN WATER LINE IN SPACE OF ADEQUATE SIZE WITH EXISTING WATER METER. CONTRACTOR TO FIELD VERIFY EXACT LOCATION AND SIZE OF EXISTING WATER LINE AND WATER METER AND UPGRADE IF REQUIRED. PROVIDE NEW BFP AS SHOWN.
2. NO TAP OFF TO BE TAKEN BEFORE BFP.
3. CONTRACTOR TO PROVIDE DOUBLE CHECK VALVE ASSEMBLY OF ASSE 1024 STANDARD.WATTS SERIES LF7 OR EQUIVALENT.
4. EXISTING WATER CLOSET TO REMAIN WITH EXISTING CW CONNECTION, ASSOCIATED ACCESSORIES AND FITTINGS. CONTRACTOR TO FIELD VERIFY THE CONDITION OF EXISTING PIPING AND REPLACE IF REQUIRED.
5. EXTEND AND CONNECT NEW 1" CW LINE TO EXISTING WATER CLOSET PIPING.

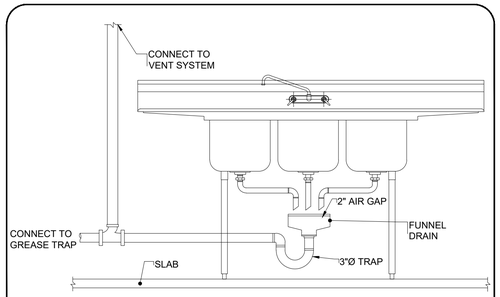

3 COMPARTMENT SINK DETAIL

NOT TO SCALE

NEW STORAGE WATER HEATER SCHEDULE

MANUFACTURER	BRADFORD WHITE
MODEL	LE250LN3-3
EQUIPMENT TAG	WH-1
STATUS	NEW
CAPACITY	47 GALLONS
QUANTITY	1
KW	11
RECOVERY	58 GPH*
ENERGY FACTOR	0.92
VOLTAGE	208/3/60
AMPERAGE	30.53
WEIGHT	173 LBS

1. *NON-SIMULTANEOUS ELEMENT OPERATION@ 80° F TEMPERATURE RISE
2. INSTALL NEW EXPANSION TANK (ET-1) AMTROL MODEL THERM-X-TROL ST-5C-DD, 2.0 GAL PER LOCAL CODE REQUIREMENTS

RECIRCULATION PUMP SCHEDULE

MANUFACTURER & MODEL	GRUNDFOS UP-15-18 B5
EQUIPMENT TAG	RCP-1
STATUS	NEW
GPM	2
WATER TEMP.(°F)	140
PUMP TYPE	INLINE
MHP	85 WATTS
V/PH/HZ	115/1/60
RPM	2280
SERVICE FACTOR	1.0

NOTE:

PROVIDE AQUA STAT WITH AUTOMATIC TIMER KIT FOR THE TEMPERATURE CONTROL OF HOT WATER SYSTEM. COORDINATE ELECTRICAL REQUIREMENTS FOR TIMER WITH ELECTRICAL CONTRACTOR.

INDIRECT WASTE CONNECTION DETAIL

NOT TO SCALE

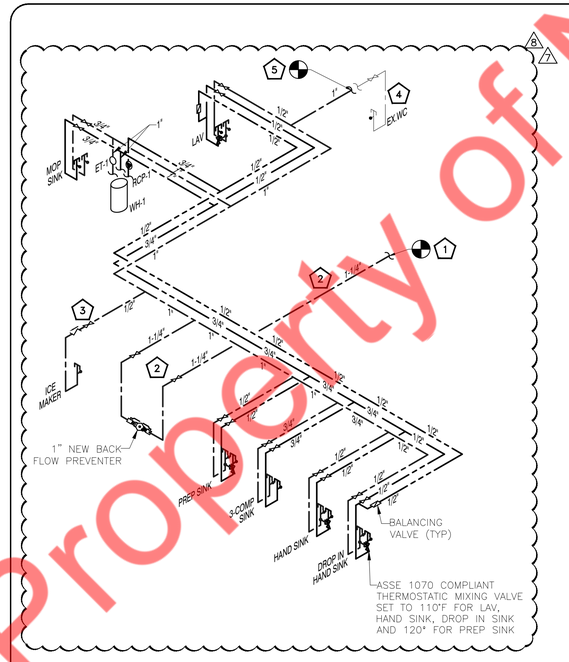

FIXTURE FACTOR VALUE *

1 WATER CLOSET (E) @ 10	= 10
1 LAVATORY @ 2	= 2
1 3-COMP SINK @4	= 4
1 HAND SINK @ 0.7	= 0.7
1 DROP IN HAND SINK @ 0.7	= 0.7
1 PREP SINK @1.4	= 1.4
1 MOP SINK @ 3	= 3
1 MISC.** @ 0.25	= 0.25
TOTAL	= 22.05

* TABLE E103.3(2) -FLORIDA PLUMBING CODE,2023 (8TH EDITION)

** ICE MAKER

1-1/4" WATER LINE REQUIRED

WATER RISER | SCALE N.T.S. | 2

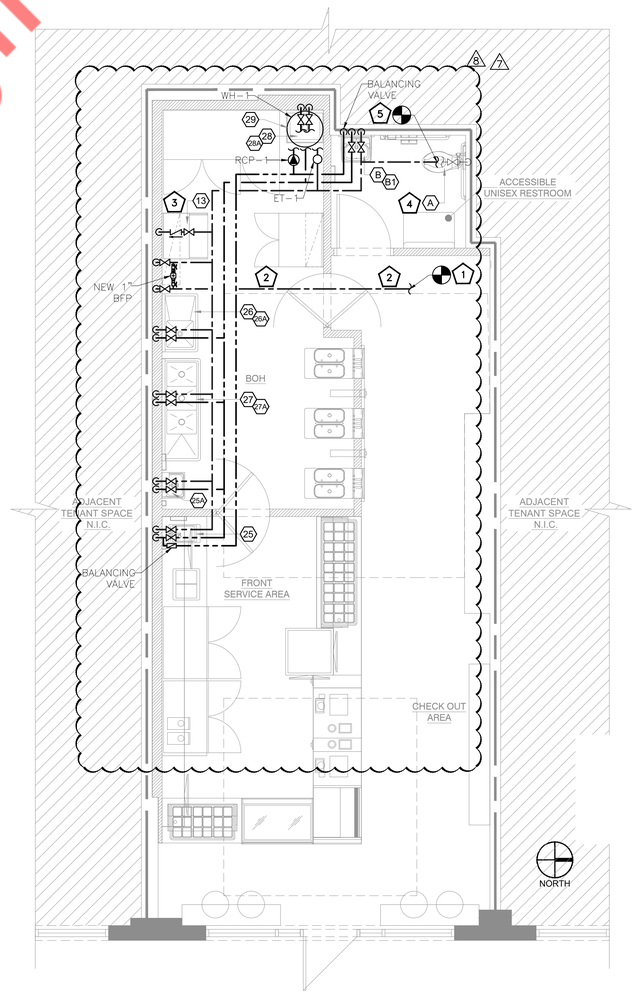

WATER PLAN | SCALE 1/4" = 1'-0" | 1

Property of NY Engineers

NY ENGINEERS

THIS DOCUMENT IS THE PROPERTY OF NY ENGINEERS AND SHALL NOT BE REPRODUCED WITHOUT THE WRITTEN CONSENT OF NY ENGINEERS.

GO GREEK YOGURT

REVISIONS DATES:

SR. NO.	DETAIL	DATE
01	BD COMMENTS	07/31/2024
02	DERM CMTS.	08/22/2024
03	DERM CMTS. 2	09/11/2024
04	DERM CMTS. 3	09/20/2024
05	DERM CMTS. 4	10/09/2024
06	DERM CMTS. 5	10/30/2024
07	PROJECT CORD. 7	01/10/2025
08	PROJECT CORD. 8	02/06/2025

ISSUE DATE: 02.20.24
PROJECT #:
DRAWN BY: NYE
CHECKED BY: NYE

PLUMBING WATER PLAN AND RISER AND DETAILS

P-3

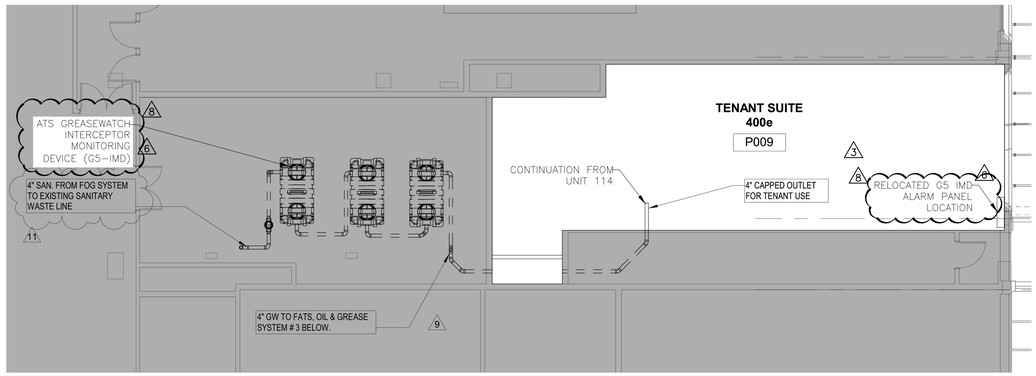

GREASE TRAP LOCATION (GROUND) | SCALE N.T.S | 1

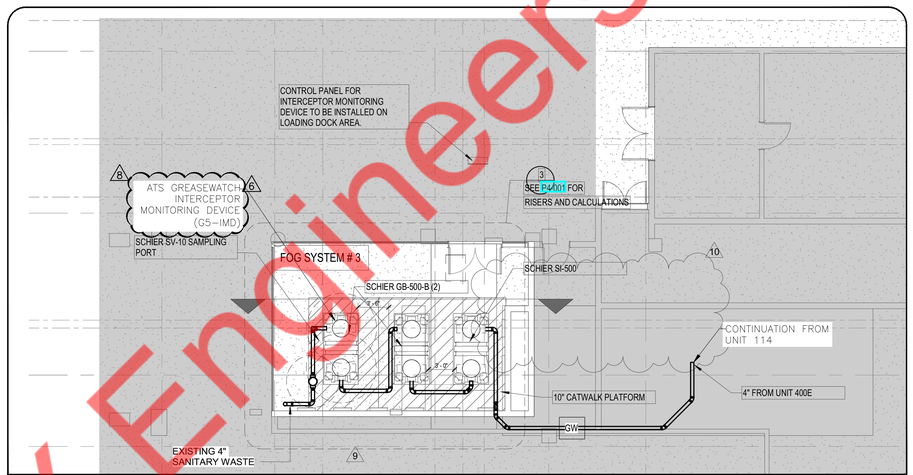

GREASE TRAP LOCATION (UPPER PARKING) | SCALE N.T.S | 2

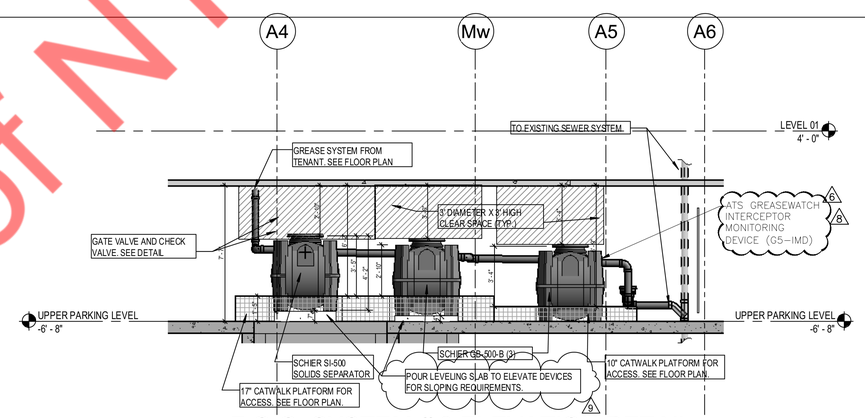

F.O.G. SYSTEM # 3 ELEVATION DETAIL

SCALE: 1/4" = 1'-0"

Grease interceptor Calculation
Per Florida Plumbing Code Section
1003.3.4, In accordance with PDI G101 Sec
8.3.1 Sized by pipe size, *1 Based on
Manning's, Pipe diameter, and 1/8" slope

Mario Rubines
786-295-1114
Mrubines@bellsouth.net

SCHIER LIFETIME GUARANTEED GREASE INTERCEPTORS

Step 1. Flow

Pipe Size	Minimum Slope	GPM*1 (Full Flow)	Minimum Flow (per Ch.24-42.6) PDI-G101 8.5	Max DFUs
4"	1/8" per Ft	100	50	180

FOG SYSTEM #3

(Sq. Ft. x % Dine / Sq. Ft. Per Person = Seat) x (Turns x MPD x GPPM x POF) = Grease Capacity in Lbs.

Step 2. POF

FSE / Space #	Sizing by Sq. Ft of	% of Dinning	Sq. Ft Per	Number of Seats	Turns Per Seat	Meals or Customers Per	PRODUCTION (lbs.) Per Meal	POF in Days	Grease Capacity in
Suite 400 E	3710	67%	15	166	4	663	0.0455	90	2714
								Total required capacity	**2,714**

Use Schier Grease	Model	Qty	GPM	Grease
ASME A112.14.3	**GB-500-B**	**1**	**100**	**2817**

FOG 2.0 RER-DERM Summary Block

Hydromechanical FOG Control Device (H-FCD) — F.O.G.System # 3

Required Information	Tank No. 1	Tank No. 2	Tank No. 3	Tank No. 4
Capacity (gpm)	100 GPM	100 GPM		
FOG Load Capacity (lbs) at 99% Efficiency	2817	2817		
Manufacturer	Schier	Schier		
Model No.	GB-500-B	GB-500-B		
3rd Party Certifier (i.e., PDI, CSA, ASME)	ASME A112.14.3	ASME A112.14.3		
Interceptor Monitoring Alarm Model No.	N/A	N/A		
Interceptor Monitoring Device Model No.	N/A	ATS G5-IMD		
Solid Separator manufacturer and model	Schier Si-500			
Sampling port manufacturer and model	Schier SV10			

Updated: 7/21/2020

The FCD, and associated appurtenances on FOG-approved stamped sheets in this set must be installed on site. Equivalent or similar equipment is not accepted by this Division. Should the FOG-approved plan sheets be voided and/or revised, they shall be submitted to the Building Department, and DERM-Grease accordingly for approval.

ALL EQUIPMENT LABELS MUST VISIBLE AT THE TIME OF THE DERM/BUILDING INSPECTION, AND REMAIN VISIBLE THEREAFTER

GREASE TRAP ELEVATION DETAIL | SCALE N.T.S | 3

Property of NY Engineers

NY ENGINEERS

THIS DOCUMENT IS THE PROPERTY OF NY ENGINEERS AND SHALL NOT BE REPRODUCED WITHOUT THE WRITTEN CONSENT OF NY ENGINEERS.

GO GREEK YOGURT

REVISIONS DATES:

SR. NO.	DETAIL	DATE
01	BD COMMENTS	07/31/2024
02	DERM CMTS. 2	08/22/2024
03	DERM CMTS. 2 3	09/11/2024
04	DERM CMTS. 3	09/20/2024
05	DERM CMTS. 4	10/09/2024
06	DERM CMTS. 5 6	10/30/2024
07	PROJECT CORD.	01/10/2025
08	PROJECT CORD. 8	02/06/2025

ISSUE DATE: 02.20.24
PROJECT #:
DRAWN BY: NYE
CHECKED BY: NYE

GREASE TRAP DETAILS (1 OF 2)

P-4

INTERCEPTOR MONITORING DEVICE

G5 IMD Tank Unit

GREASEwatch® Interceptor Monitoring Device. Each G5 Tank Unit to be installed inside of the Grease Interceptor to measure the thickness of the top grease layer, bottom sludge layer, change in liquid level and wastewater temperature inside of a Grease Interceptor. G5 Tank Unit is powered by a 3.9v lithium battery and transmits data to G5 Gateway via Radio Frequency.

G5 IMD Alarm Panel & Gateway

The G5 GREASEwatch® IMA Gateway and Alarm Panel is to be installed inside of building within Radio Signal Range of GREASEwatch G5 Tank Unit(s). The G5 Alarm Panel receives data from the G5 Tank unit(s) via radio frequency and then forwards data to ATS website for signal processing and Interceptor Monitoring Alarm(s) at a small yearly fee. G5 receiver is powered by 120v power supply (plug) and transmits data to website via cellular telemetry. This avoids nuisance alarms

FOG Alarm Calculation

Manufacturer	Schier Products		
Model	GB-500-B		
Pipe Size	4"		
Certified Grease Layer at full capacity	25.3"	=	2,817 Lbs of grease
75% of certified grease Layer	x .75		
G5 will alarm in last interceptor at	**19"**	=	**2,113 Lbs. of grease**
Static liquid level	37"		
Liquid Rise to Alarm	+ 3"	Above Invert	
Alarm at	**40"**	**Water Depth**	

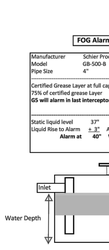

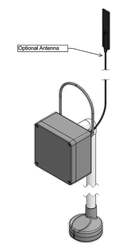

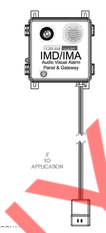

GREASE INTERCEPTOR MONITORING ALARM DETAILS | SCALE N.T.S | 1

SPECIFICATION AND SUBMITTAL

GB-500-B

100 GPM 99% Efficient Grease Interceptor for Indoor/Outdoor Installation

Actual Size

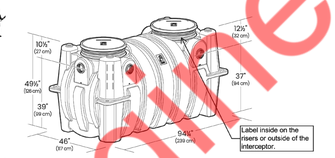

This unit is certified to ASME A112.14.3 (Type D) and CSA B481. This unit does not require flow control.

Satisfies Miami DERM 99% efficiency requirements. Product labels are permanently affixed to inside and outside of unit for easy viewing.

SUBMITTAL

Standard

Location: Indoor/outdoor
Installation: above/below grade
Flow Rate / Certified Grease Capacity: 100 GPM (6.3 L/s) / 2,817 lbs.
Removal Efficiency of the:
Rated Capacity: 99.9%
99% Efficiency Rating: 2,817 lbs. certified grease capacity @ 99.2% efficiency
Solids Capacity: 100 gal.
Liquid Capacity: 510 gal.
Weight: 1,018 lbs.
Connections: 4" (100 mm) FPT / plain end triple-inlet/single-outlet
Cover: galvanize light pedestrian cast iron with H20 lb. load rating

Options

- 6" plain end inlet/outlet (straight-through)
- 6" plain end inlet/outlet (straight-through) with dual pumpout port connections
- 6" plain end inlet/outlet (triple outlet)
- 6" MPT inlet/outlet (stainless steel, straight-through)
- **-FO** (fixed outlet)
- **C24HD:** Highway rated bolted composite covers - 16,000 lbs.
- **CC2:** Integral membrane clamping collar kit
- **AG12:** Above Grade Support
- **AK2:** High Water Anchor Kit
- **PP3:** Pumpout Port

Field Cut Risers

- **FCR2** (x2) : 4" - 34"
- **FCR2** (x4) : 34" - 64"
- **FCR2** (x6) : 64" - 94"

Approval

Signature:	Date:	Company:
Specifying Engineer:	Engineering Firm:	

SCHIER LIFETIME GUARANTEED GREASE INTERCEPTORS | **MODEL NUMBER:** GB-500-B | **DESCRIPTION:** 100 GPM Polyethylene Grease Interceptor | PART #: 4076-005-01 | DWG BY: B. Karrer | DATE: 7/1/2019 | REV: | ECO:

9520 Woodend Road | Edwardsville, KS 66111 | Tel: 913-321-2200 | www.schierproducts.com
© Copyright 2019 Schier, All Rights Reserved

SPECIFICATION AND SUBMITTAL

SI-500

510 Gallon Billy Goat™ Indoor/Outdoor Kitchen Solids Interceptor

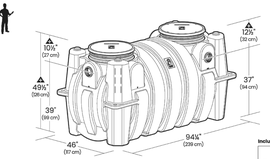

Adjustable cover adapters provide up to 4" of additional height.

SUBMITTAL

Standard

Location: Indoor/outdoor
Installation: above/below grade
Solids Capacity: 457 gal. (1,730 L)
Flow Rate (4"): 125 GPM (7.9 L/s)
Flow Rate (6"): 275 GPM (17.1 L/s)
Liquid Capacity: 510 gal. (1,931 L)
Weight: 330 lbs. (150 kg)
Connections: 4" FPT with 4" plain end adapters, single inlet and triple outlet
Covers: Cast iron covers, pickable 24" gas/water tight, H-20 rated, proof-load tested to 40,000 lbs.
Access Restriction: Safety Step™ (450 lb. rating) built into each cover adapter

Options

- 6" plain end inlet/outlet (straight-through) with dual pumpout port connections
- **C24HD** Composite covers, bolted 24" gas/water tight, traffic load rated for 16,000 lbs.

Accessories

- **FCR2 (x2)** : 4" - 34" field cut risers
- **FCR2 (x4)** : 34" - 64" field cut risers
- **FCR2 (x6)** : 64" - 94" field cut risers
- **CA2** Adaptor for 24" corrugated pipe riser
- **PP3** Pumpout port
- **AK1 (x2)** High Water Anchor Kit
- **AK2** High Water Anchor Kit
- **AG12** Above grade support
- **PLAIN-SA-24** 2" plain end fitting
- **PLAIN-LA-24** 2" plain end fitting
- **FPT-EA-24** 4" x 2" FPT fitting
- **FPT-LA-23** 3" x 2" FPT fitting
- **CC2** Integral membrane clamping collar kit

Approval

Signature:	Date:	Company:
Specifying Engineer:	Engineering Firm:	

SCHIER | **MODEL NUMBER:** SI-500 | **DESCRIPTION:** 510 Gallon Polyethylene Solids Interceptor | PART #: 5075-001-01 | DWG BY: B. Karrer | DATE: 10/12/2020 | REV: | ECO:

9455 Woodend Drive | Shawnee, KS 66218 | 913-951-3300 | schierproducts.com
© Copyright 2020 Schier Products Company

GREASE TRAP SPECIFICATIONS | SCALE N.T.S | 2

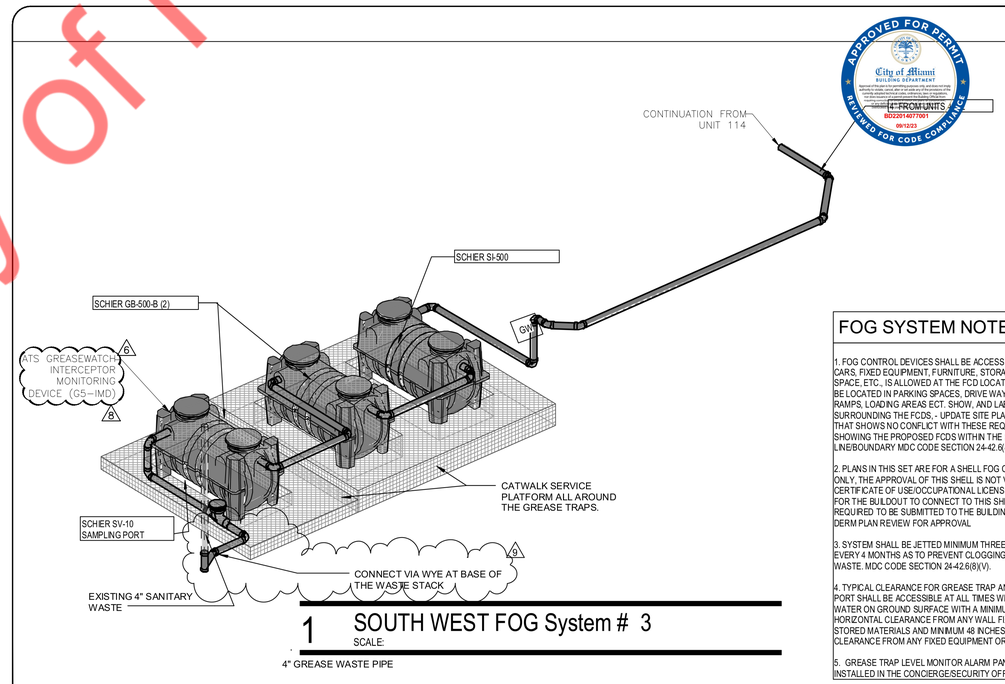

1 SOUTH WEST FOG System # 3
SCALE:

GREASE TRAP ISOMETRIC DRAWING | SCALE N.T.S | 3

FOG SYSTEM NOTES:

1. FOG CONTROL DEVICES SHALL BE ACCESSIBLE AT ALL TIMES. NO CARS, FIXED EQUIPMENT, FURNITURE, STORAGE AREA, PARKING SPACE, ETC., IS ALLOWED AT THE FCD LOCATION. FCDS SHALL NOT BE LOCATED IN PARKING SPACES, DRIVE WAYS, ENTRANCE/EXIT RAMPS, LOADING AREAS ECT. SHOW, AND LABEL THE AREAS SURROUNDING THE FCDS. - UPDATE SITE PLANS ACCORDINGLY THAT SHOWS NO CONFLICT WITH THESE REQUIREMENTS, AND SHOWING THE PROPOSED FCDS WITHIN THE PROPERTY LINE/BOUNDARY MDC CODE SECTION 24-42.6(8)(I)

2. PLANS IN THIS SET ARE FOR A SHELL FOG CONTROL SYSTEM ONLY, THE APPROVAL OF THIS SHELL IS NOT VALID FOR OBTAINING CERTIFICATE OF USE/OCCUPATIONAL LICENSE APPROVALS. PLANS FOR THE BUILDOUT TO CONNECT TO THIS SHELL SYSTEM ARE REQUIRED TO BE SUBMITTED TO THE BUILDING DEPARTMENT, AND DERM PLAN REVIEW FOR APPROVAL

3. SYSTEM SHALL BE JETTED MINIMUM THREE TIMES A YEAR OR EVERY 4 MONTHS AS TO PREVENT CLOGGING BY FOG AND OTHER WASTE. MDC CODE SECTION 24-42.6(8)(V).

4. TYPICAL CLEARANCE FOR GREASE TRAP AND ITS SAMPLING PORT SHALL BE ACCESSIBLE AT ALL TIMES WITHOUT STANDING WATER ON GROUND SURFACE WITH A MINIMUM 36 INCHES HORIZONTAL CLEARANCE FROM ANY WALL FIXED EQUIPMENT OR STORED MATERIALS AND MINIMUM 48 INCHES VERTICAL CLEARANCE FROM ANY FIXED EQUIPMENT OR STORED MATERIALS

5. GREASE TRAP LEVEL MONITOR ALARM PANELS SHALL BE INSTALLED IN THE CONCIERGE/SECURITY OFFICE.

Property of NY Engineers

NY ENGINEERS

THIS DOCUMENT IS THE PROPERTY OF NY ENGINEERS AND SHALL NOT BE REPRODUCED WITHOUT THE WRITTEN CONSENT OF NY ENGINEERS.

GO GREEK YOGURT

REVISIONS DATES:

SR. NO.	DETAIL	DATE
01	BD COMMENTS	07/31/2024
02	DERM CMTS. 2	08/22/2024
03	DERM CMTS. 2	09/11/2024
04	DERM CMTS. 3	09/20/2024
05	DERM CMTS. 4	10/09/2024
06	DERM CMTS. 5 6	10/30/2024
07	PROJECT CORD.	01/10/2025
08	PROJECT CORD. 8	02/06/2025

ISSUE DATE: 02.20.24
PROJECT #:
DRAWN BY: NYE
CHECKED BY: NYE

GREASE TRAP DETAILS (2 OF 2)

P-5